Construction Series MMCE002
Master by Marius Chescu
Prototype and instructions by Nick Greene

MASTERPIECE MODELS LLC

OTIS STEAM EXCAVATOR 1/35TH SCALE RESIN KIT

Preparation and Finishing Instructions
Read Thoroughly Before You Begin

For assembly, follow the exploded-view diagram and these instructions provided with your kit. The preparation and finishing steps listed here are recommended for best overall results. Read the assembly instructions in their entirety before beginning assembly.

1. Thoroughly wash all urethane resin (grey plastic) parts. It's very important to wash all urethane resin parts thoroughly prior to assembly so that the paint and glue can fully adhere to your model. To wash the parts, use warm water with Ajax™, Comet™, or similar chlorine bleach-based powdered soap. Do this in a sink or basin with a sponge or fine steel wool sanding pad and rinse thoroughly. This will remove any oily residue such as mold release compounds, urethane residues, and finger oils from handling which can cause poor adhesion of paint and glue. You can also choose to wash your model again after you have completed assembly to remove any additional finger oils that may have accumulated during assembly.

2. Prior to assembly or painting, remove flash and casting artifacts. Remove all mold flash from the edges of parts using a hobby knife prior to removing the parts from the casting blocks. Casting blocks may be removed with a hobby knife, razor saw, or by sanding them away on a disk sander or by carefully laying the part flat on a sheet of coarse-grit sandpaper on a flat, level surface. Run the part over the sandpaper in a figure-eight motion occasionally rotating the part to ensure an even sanding. Finish on a piece of medium-grit (220) sandpaper using the same technique. Wear proper personal protective equipment like a respirator and eye-protection during sanding as the fine resin dust can be an irritant. Additionally, wet-sanding can help keep dust down as well as prevent the sandpaper from clogging. Once parts have been removed from their casting blocks, give them a once over with your hobby knife and a piece of medium-grit sandpaper to remove any remaining casting artifacts or flash.

3. Assembly. Refer to these instructions during the assembly process and don't hesitate to look ahead if the current step is unclear. Dry-fit parts without glue to check fit prior to applying glue as you may find some holes may need to be drilled out in order for other parts to fit in the correct position, or that additional sanding is required. If you have crooked parts, carefully use a hairdryer on medium heat to warm the part and straighten it to its required shape. Use your choice of cyanoacrylate glue (super glue) to glue the resin parts together as well as any chains to the resin parts.

4. Paint preparation and painting. Fill any seams or divots using your preferred method, such as hobby putty and remove the excess filler. Sand the model with fine-grit (320 or higher) sandpaper being careful not to remove any details prior to sanding to help paint adhesion. Now would be a good time to wash the model again as mentioned earlier. Once the model has fully dried, prime the part with a sandable lacquer primer. You may choose to sand the model again with fine-grit sandpaper to remove any blemishes that may have become more apparent after priming the model, re-applying primer if it has been sanded-through. Paint the model using the supplied box art or your references.

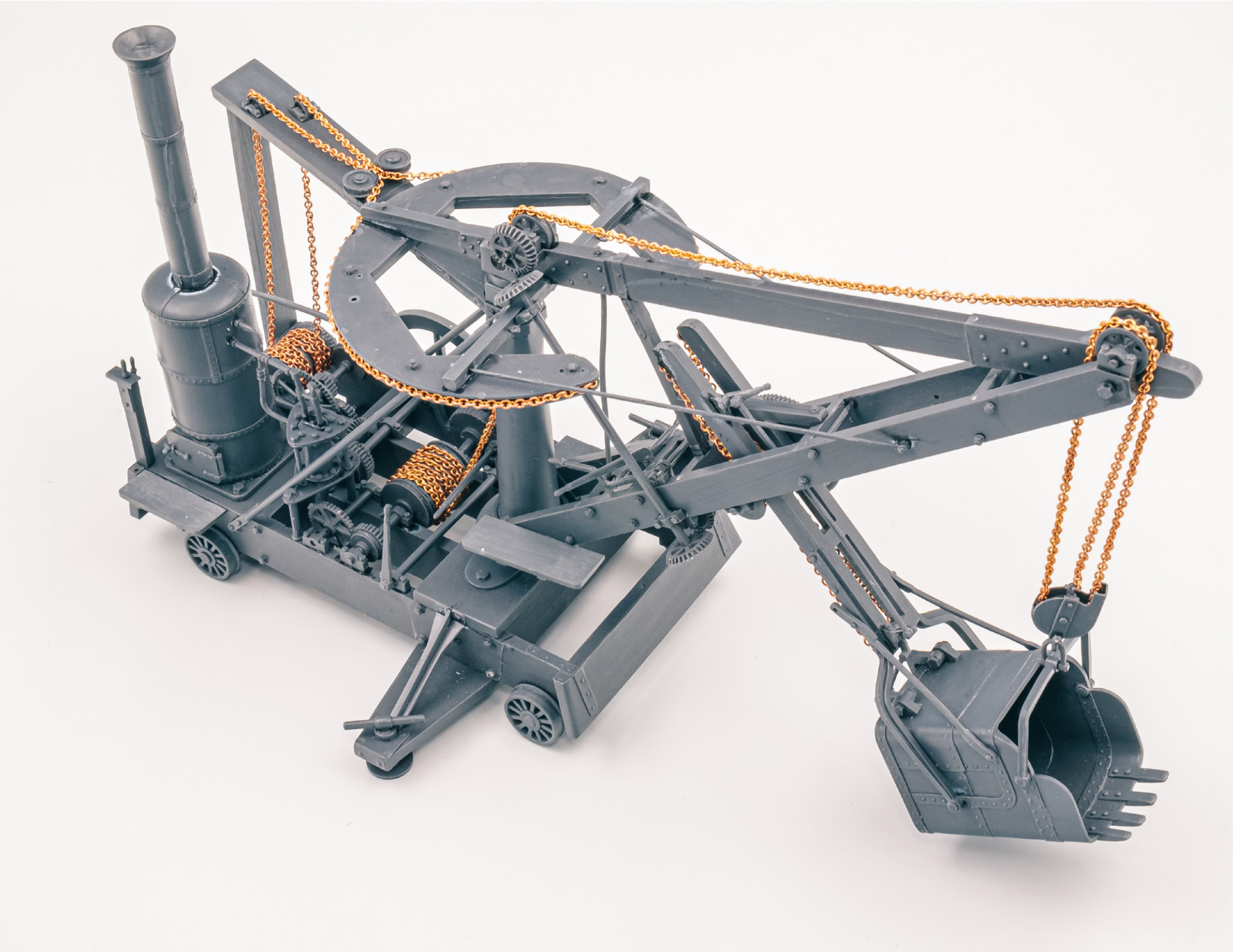

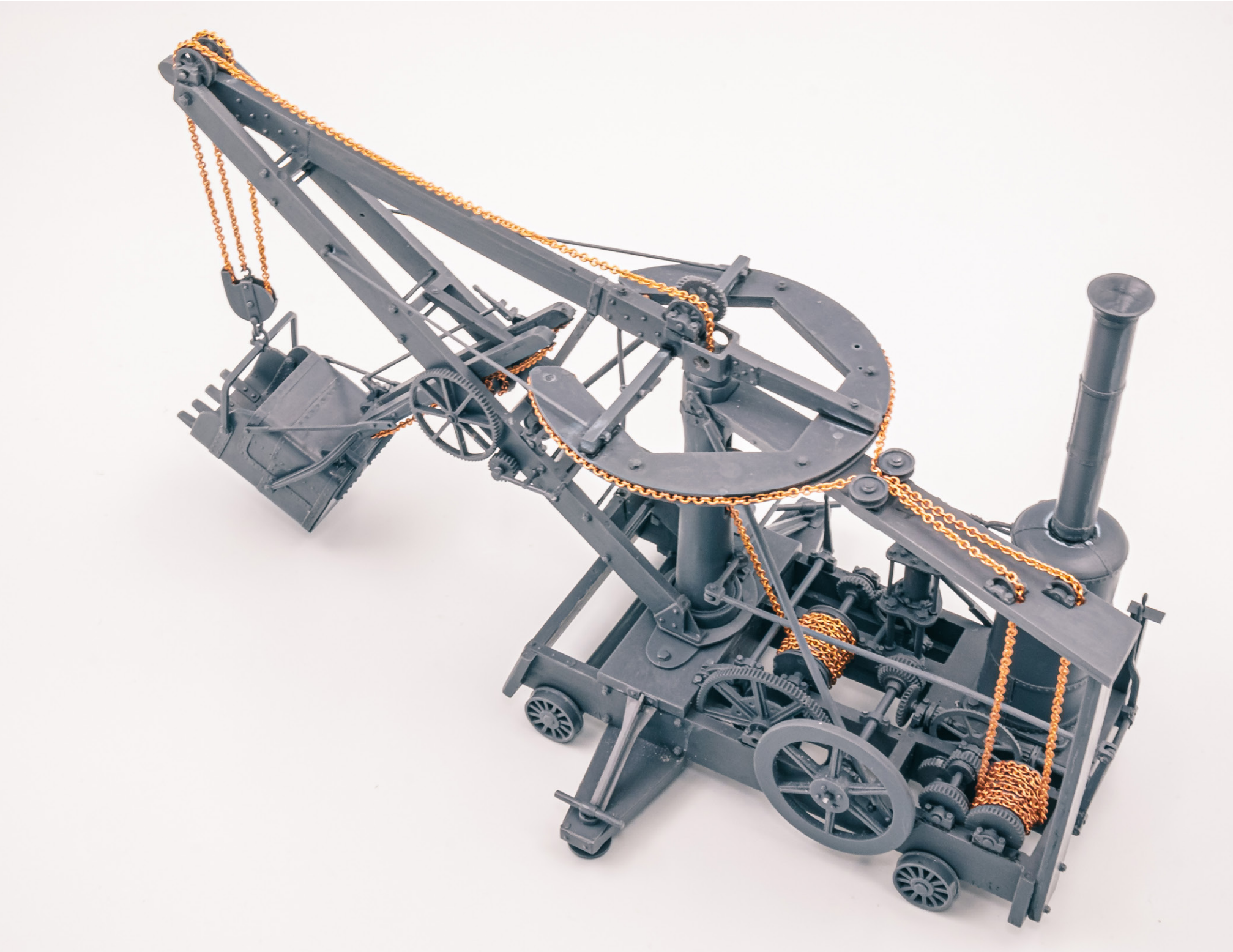

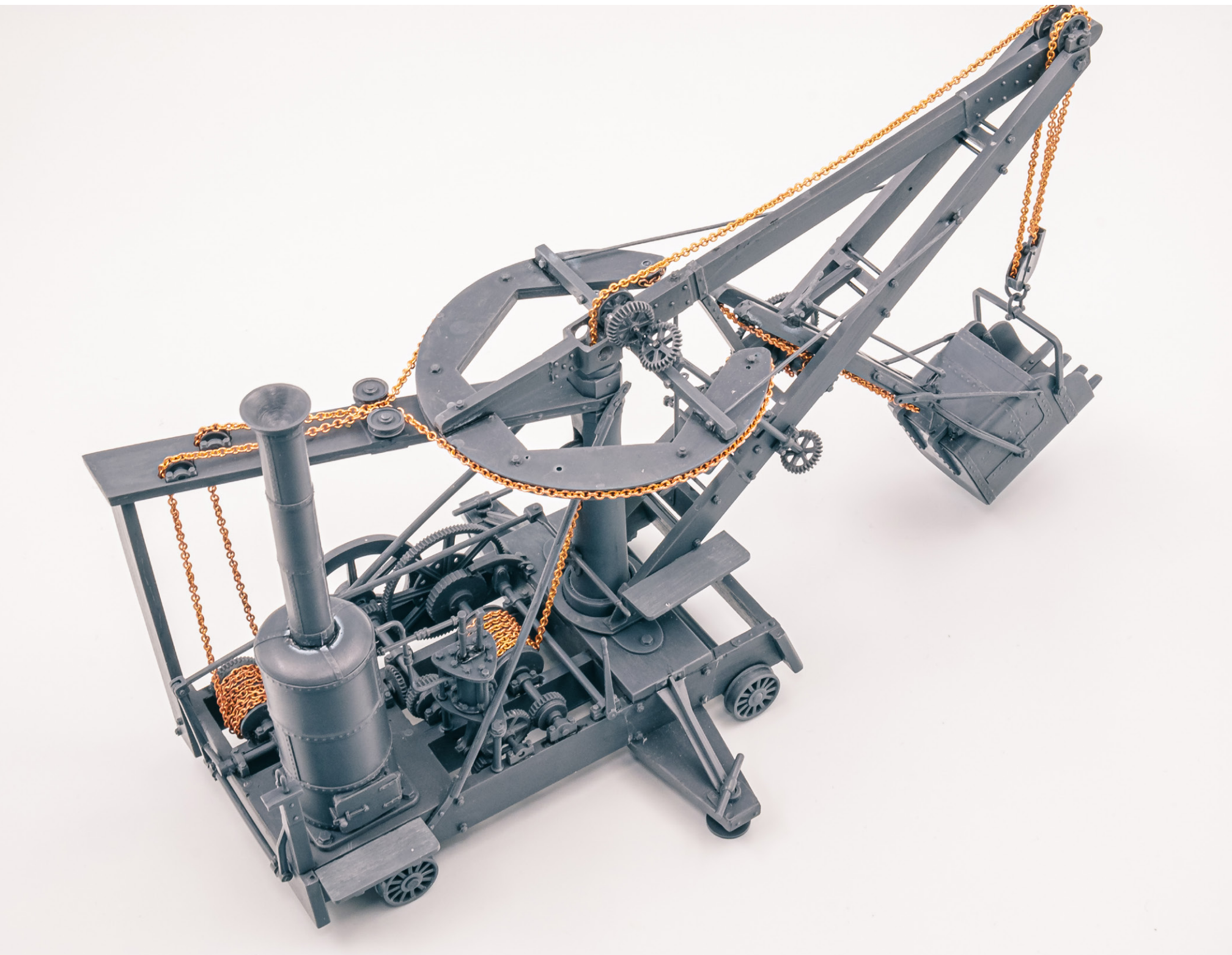

1. Install the axles to the underside of the base frame, noting that the axle with the drive gear is installed in the rear, furthest from the large panel that will end up supporting the boom of the excavator. The gear side of the axle is installed over the opening in the frame. The axle without the gear is installed in the front. Use the locating pins on the axle journals and the base frame to get the correct positioning of the axles as the rear axle will interface with the rest of the gear-train later on.

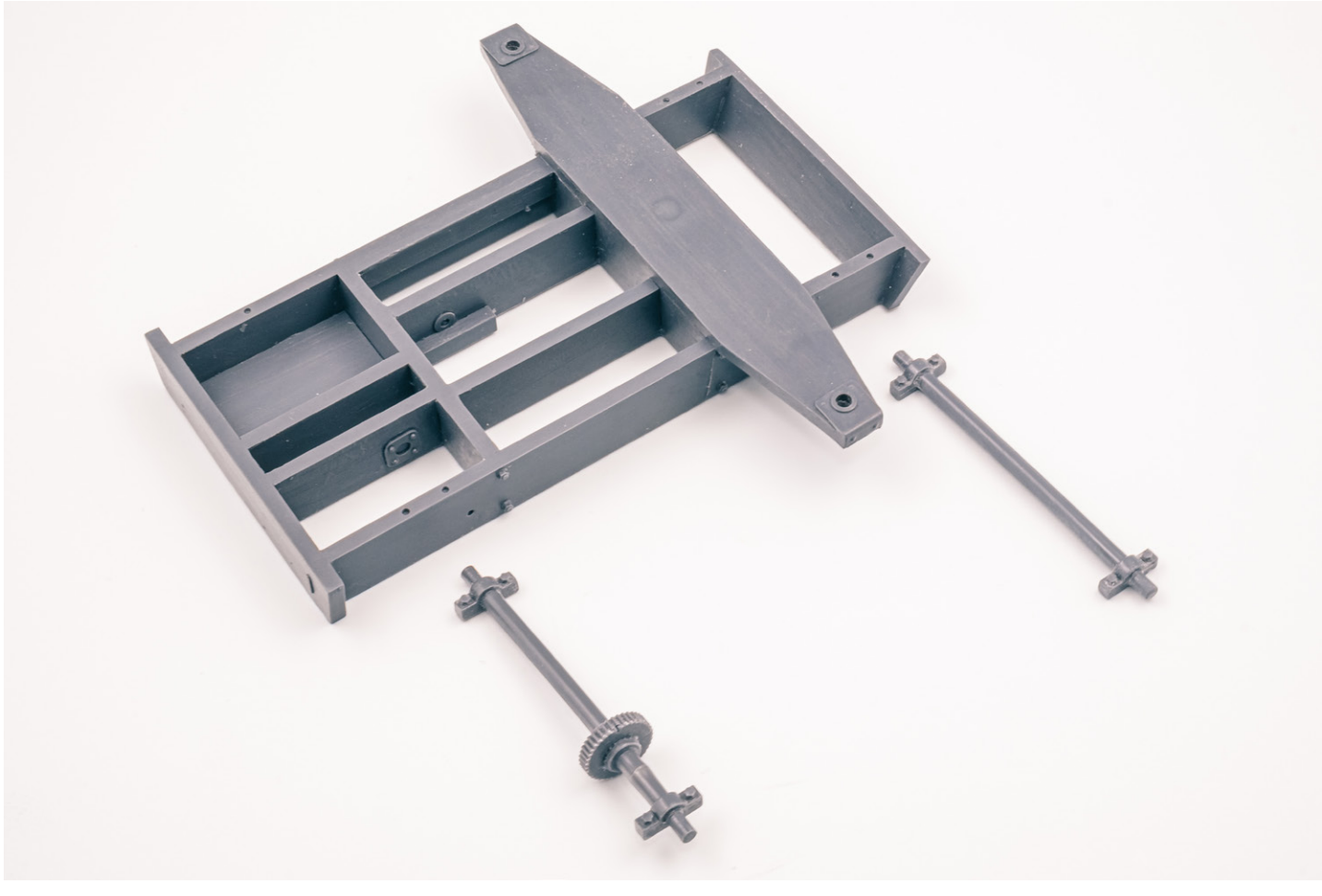

2. Install the wheels onto the ends of the axles. Here you can see the rear axle with the gear in place with the gear below the opening in the frame.

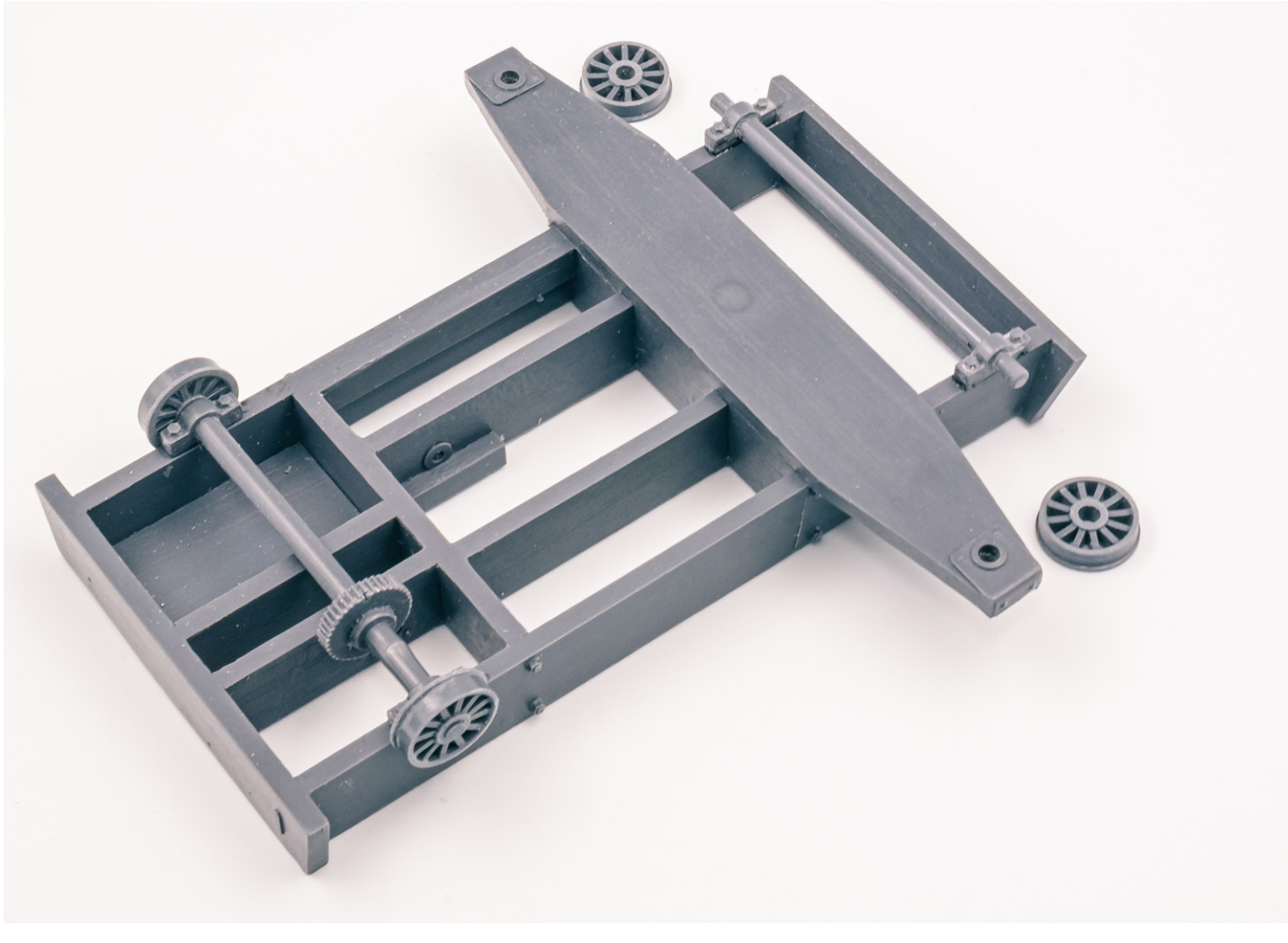

3. Flip the base frame over and install the lone solid gear in the recess in the side of the base frame, meshing this gear with the gear on the rear axle.

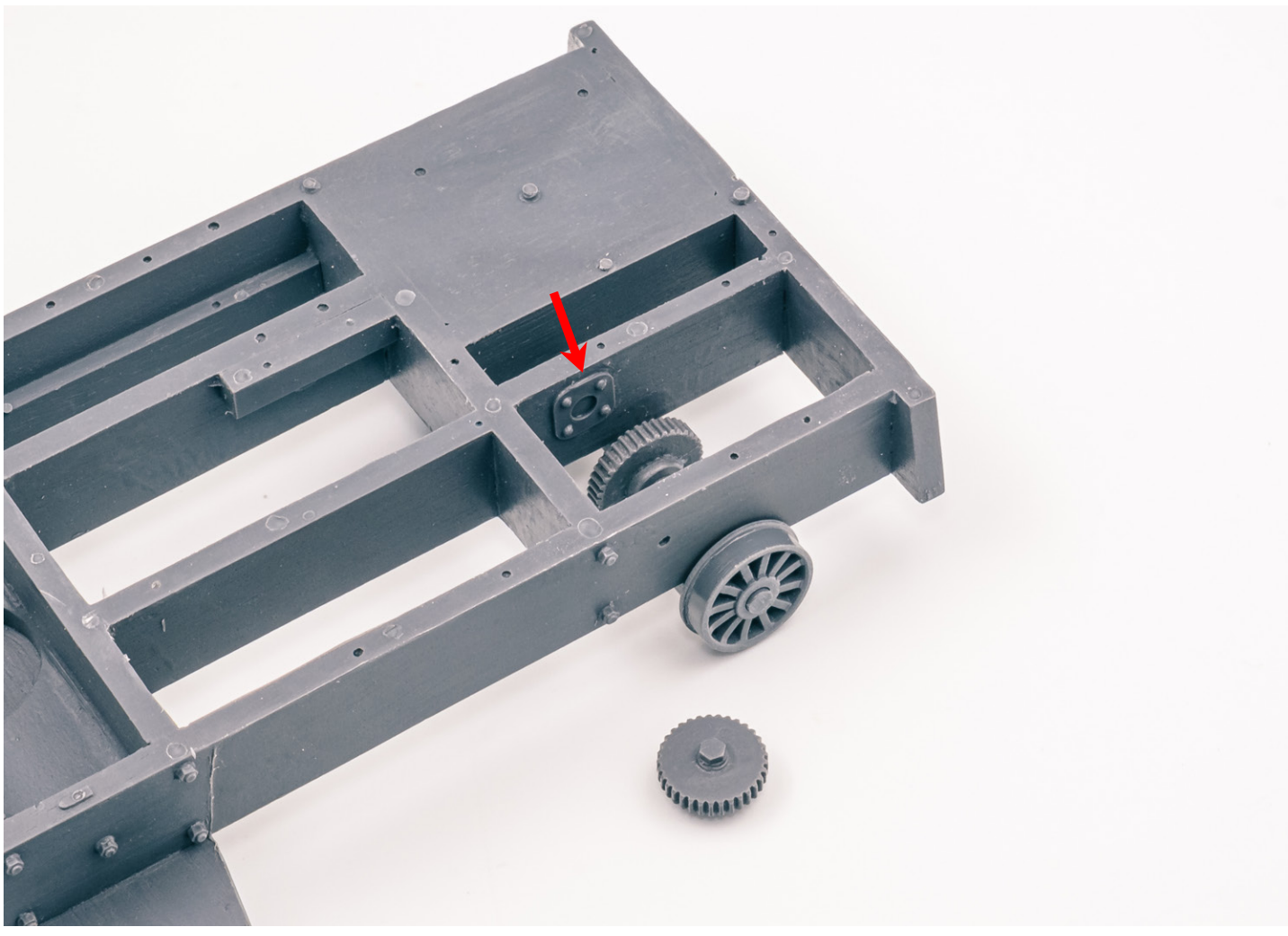

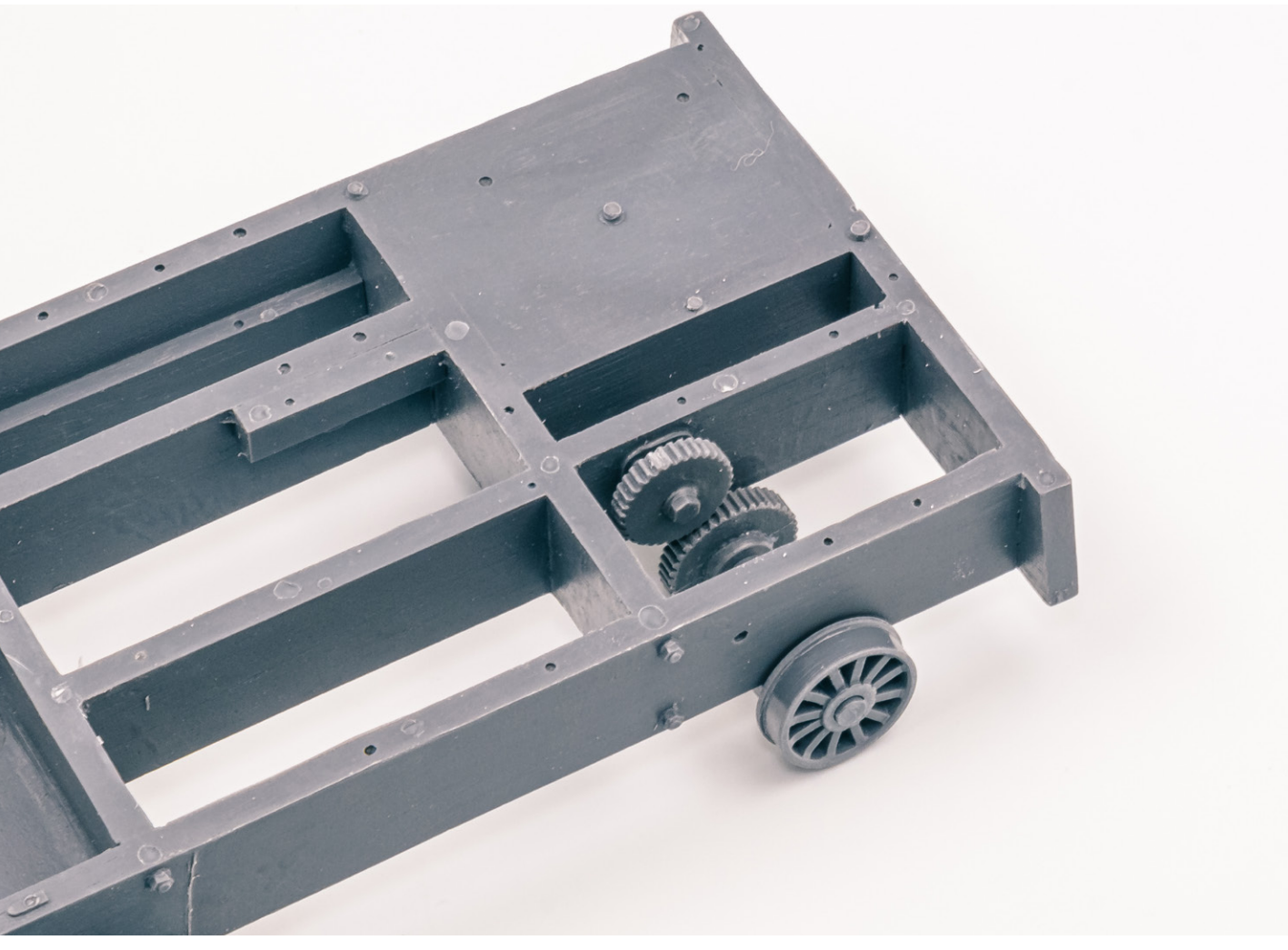

4. The solid gear installed in place in the recess in the side of the base frame

5. There are several heights and shapes of journals; a slanted, tall journal, a straight, tall journal, and a straight, short journal. Use the straight, tall journal pictured in the middle for step 4.

6. After ensuring that the main mast is clear from the top (small diameter end) and there is a free path for chain to come down from the top of the mast out of the recess in the side of the mast, install two of the straight, tall journals into the notches on the mast on either side of the main recess in the center. Then, place the medium sized wheel with groove and six windows in the recess and using the short shaft, slide the shaft through the previously installed journals on the mast to hold the wheel in place. Glue the ends of the shaft in place, noting that it's not required to keep the wheel free-spinning and you may choose to glue it onto the small shaft if you like.

7. Install the mast baseplate onto the base frame, noting the different shaped notches in the mast baseplate with corresponding different shaped locating shapes on the base frame.

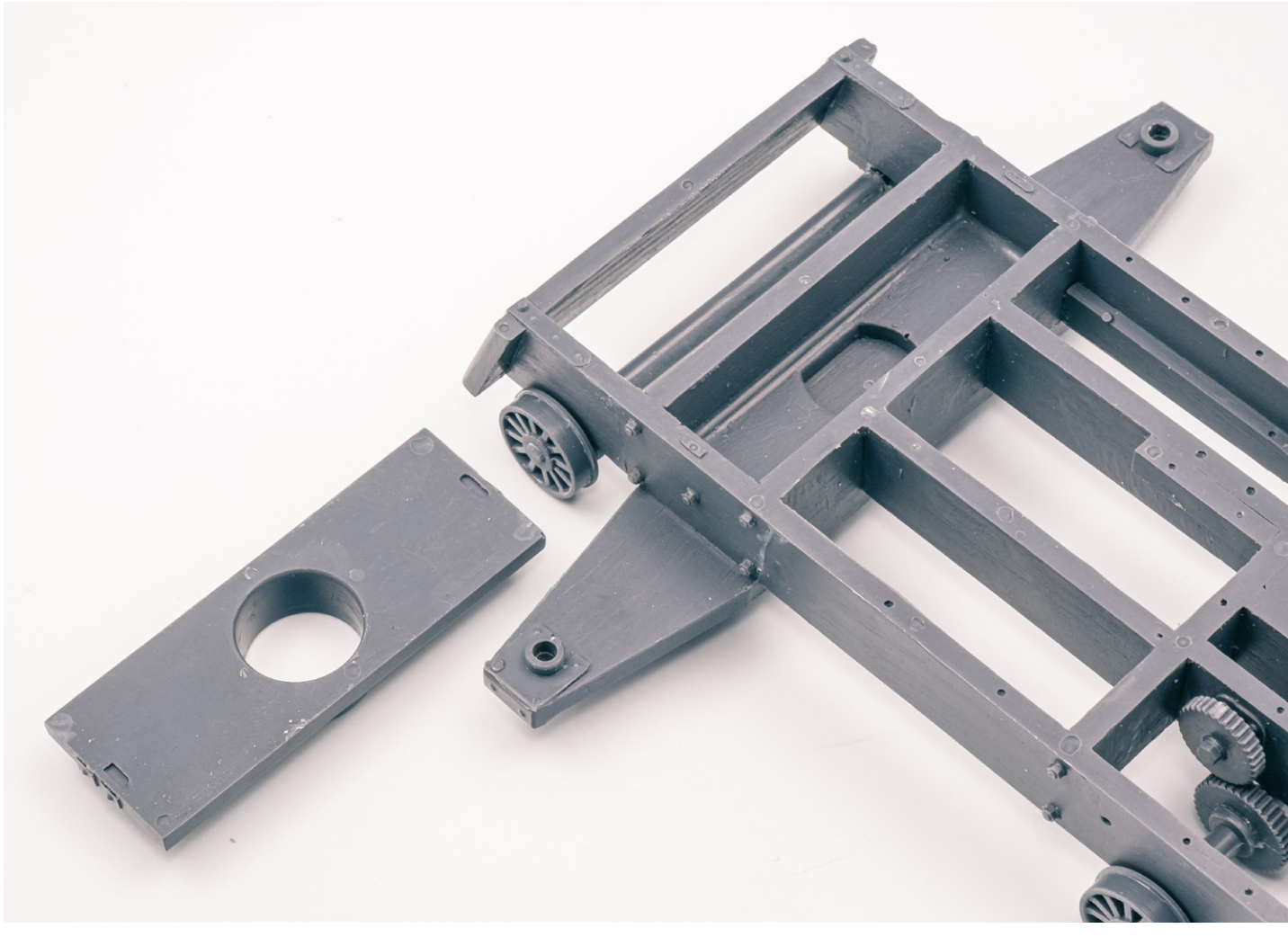

8. With the mast baseplate installed, add the braces for the jack ears. The braces are installed with the curved side facing the boss for the jacks and the wider, angled "T" shape of the brace is glued to the grove in the mast baseplate.

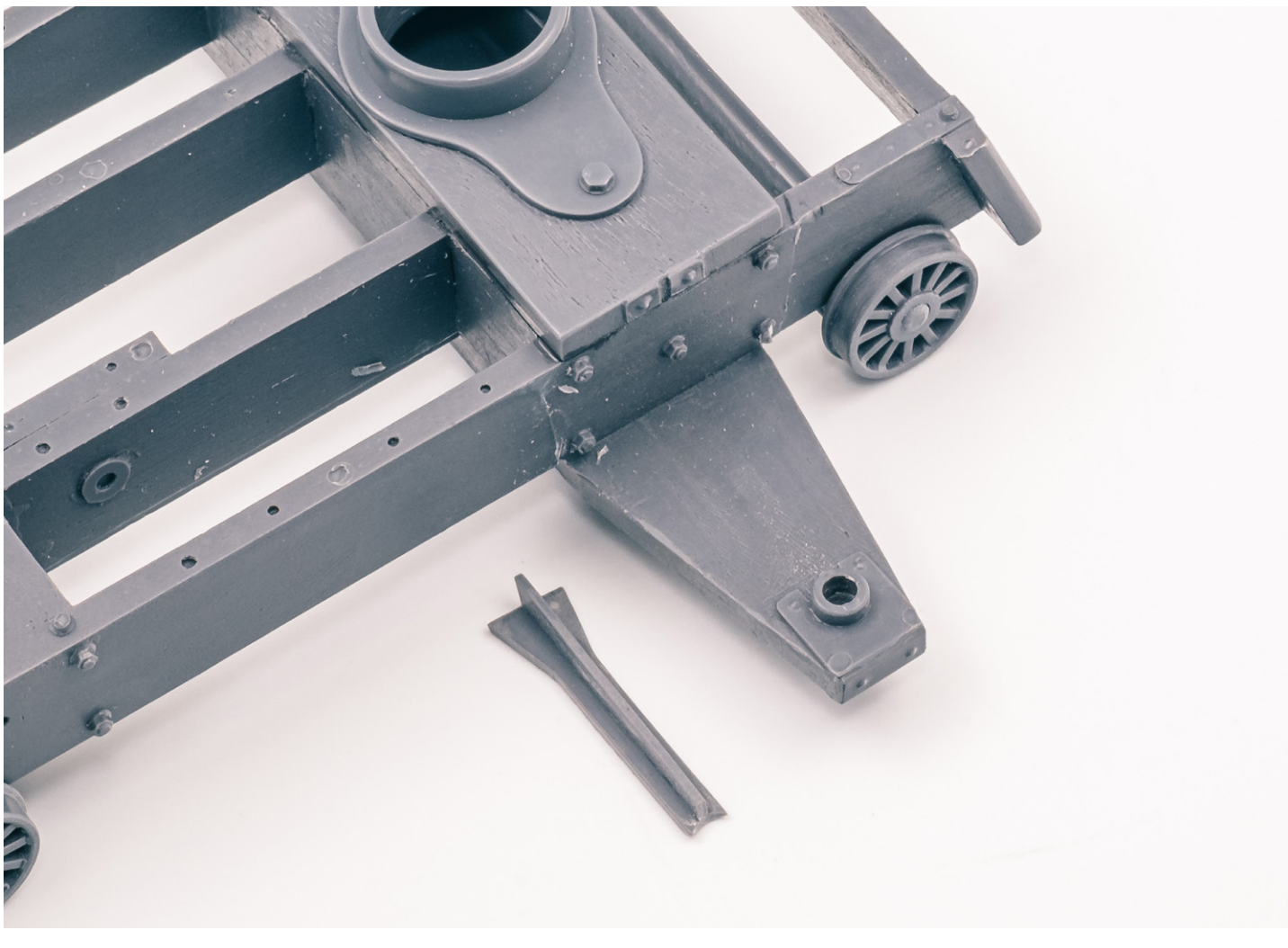

9. The installed brace for the jack ear on the right side, don't forget to install the other brace on the left side.

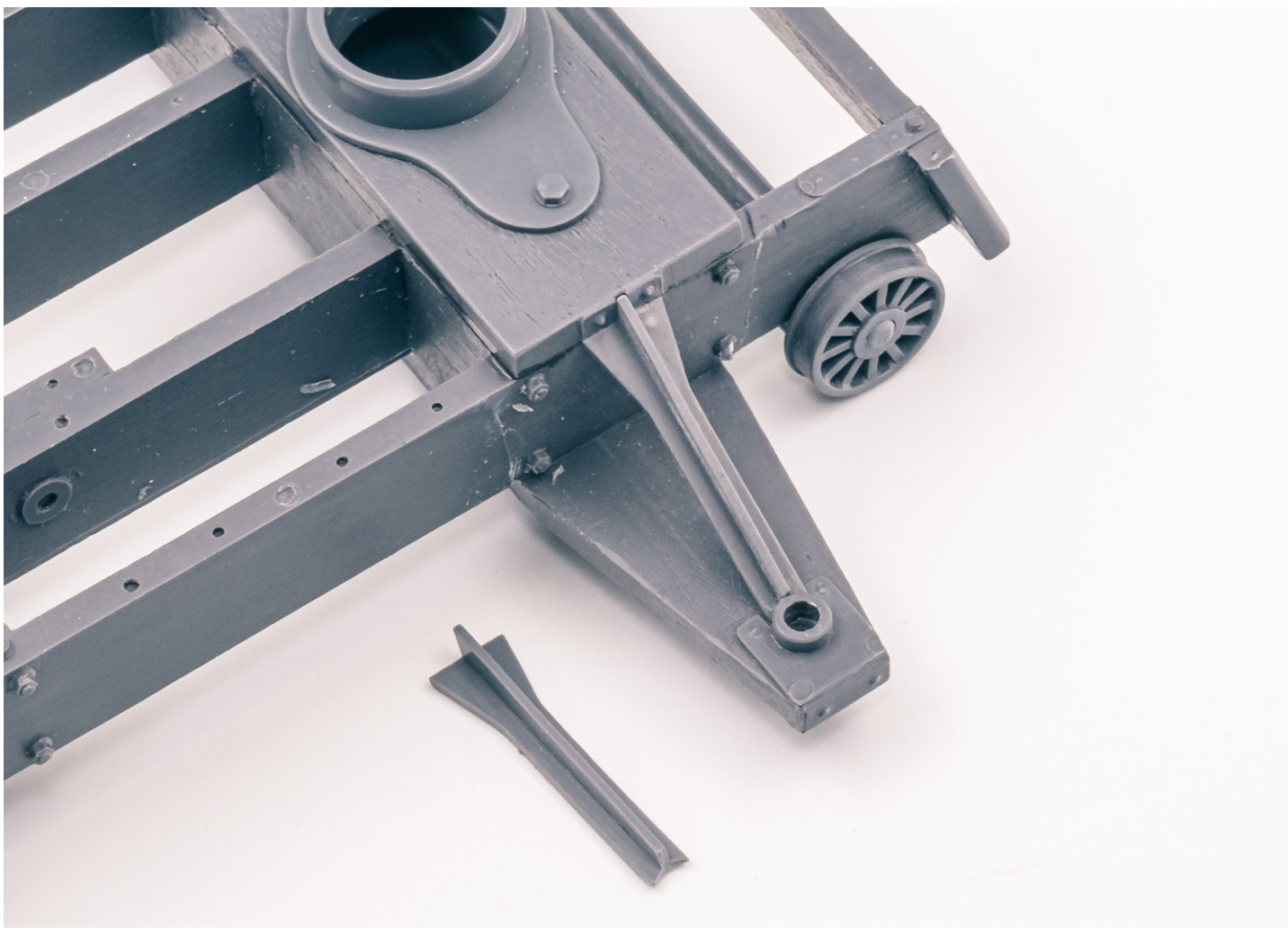

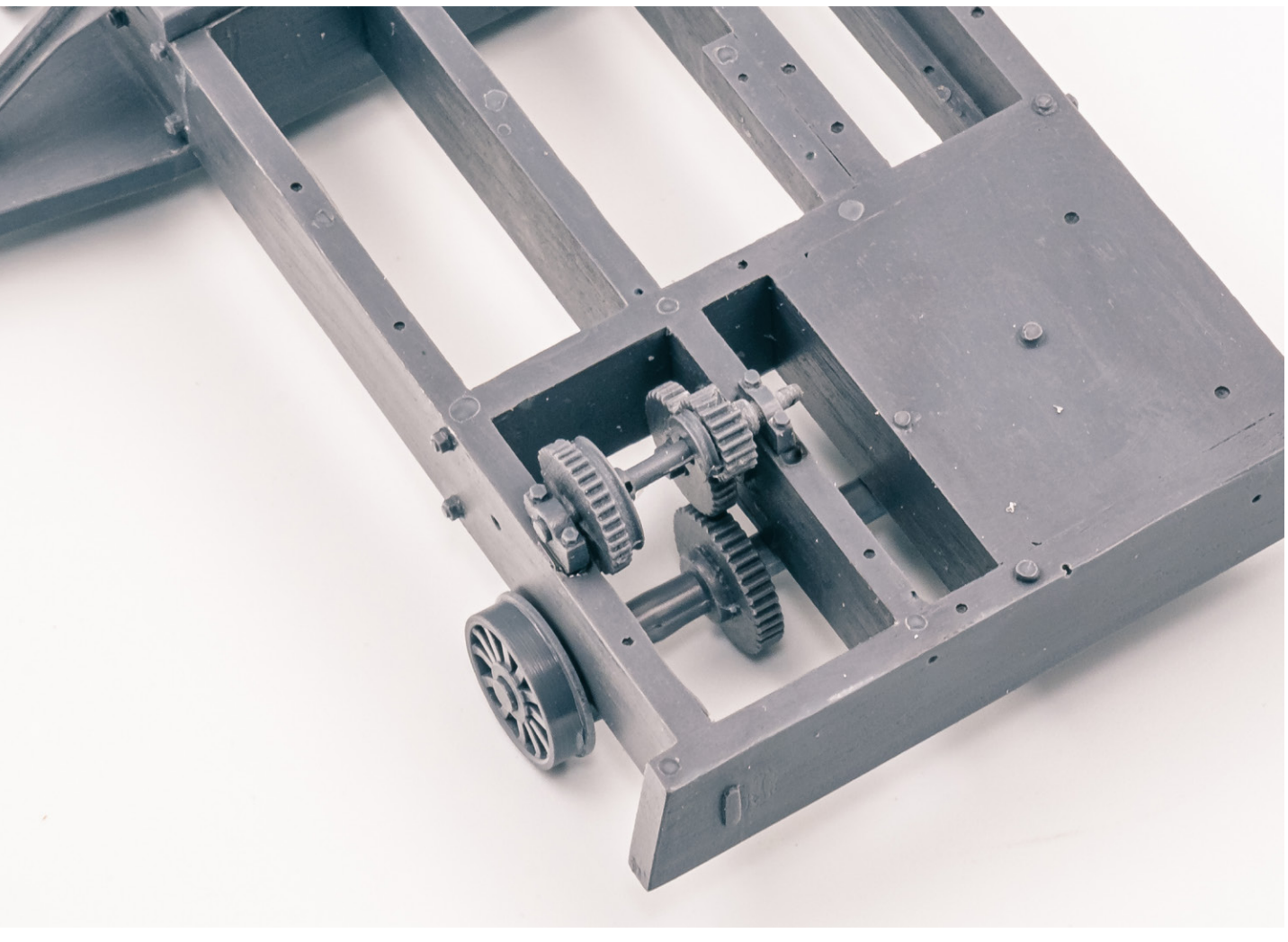

10. Moving back to the gear-train we can install the short shaft with two gears onto the frame, noting that the long end of the short shaft should be installed over the opening in the interior of the base frame. Use the corresponding journal that matches the journal cast into the shaft. You should not have to re-drill the hole in the journal beyond cleaning any flash and if you find yourself needing to substantially increase the size of the hole in the journal, you are using the wrong journal. The height of the journal you are using and the one cast onto the shaft should be the same height.

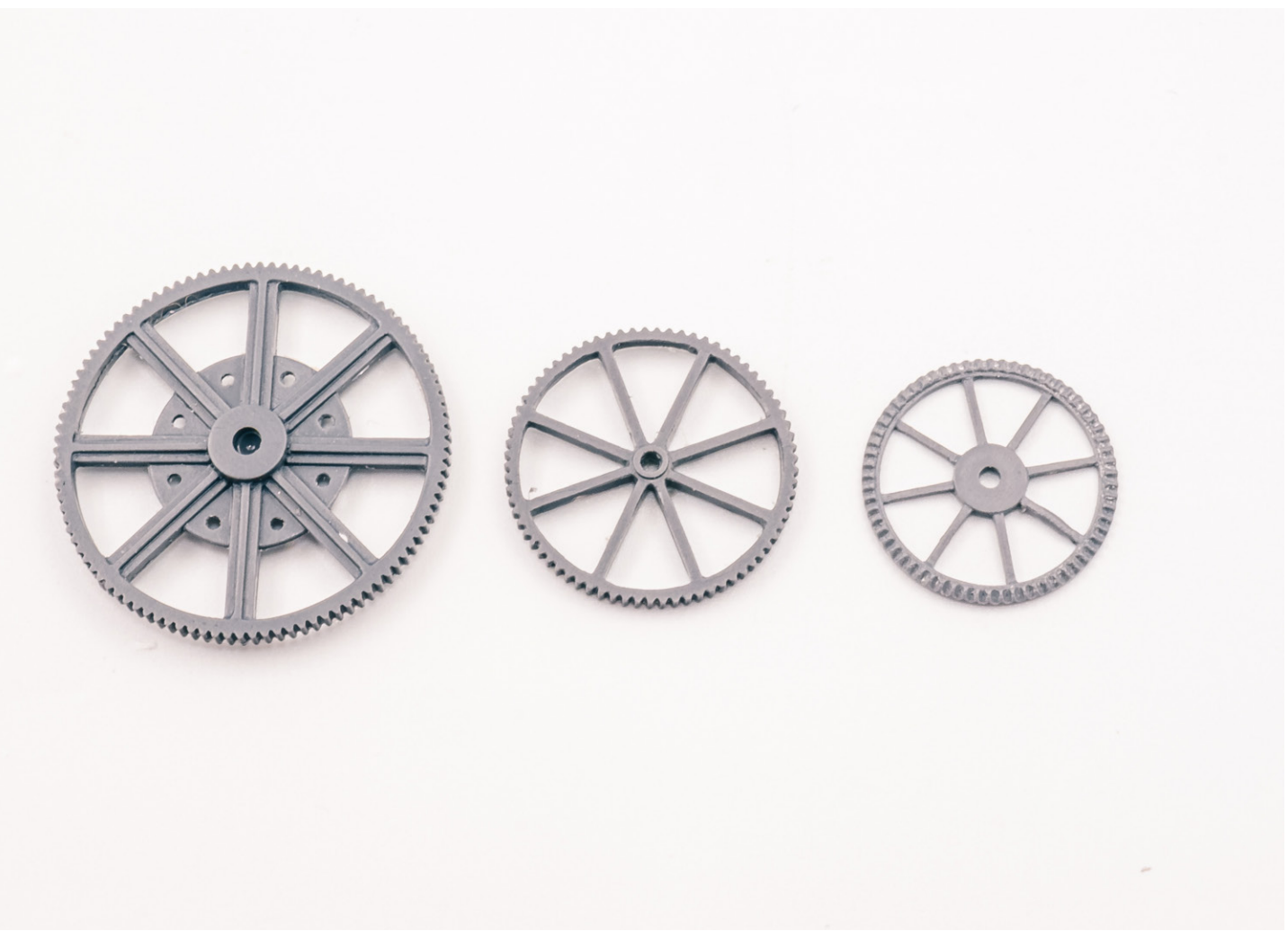

11. There are several large windowed gears included, for the next step, use the smallest of these larger gears. It is the only large gear that has beveled teeth and will be flat on one side. It is the rightmost gear in this photo.

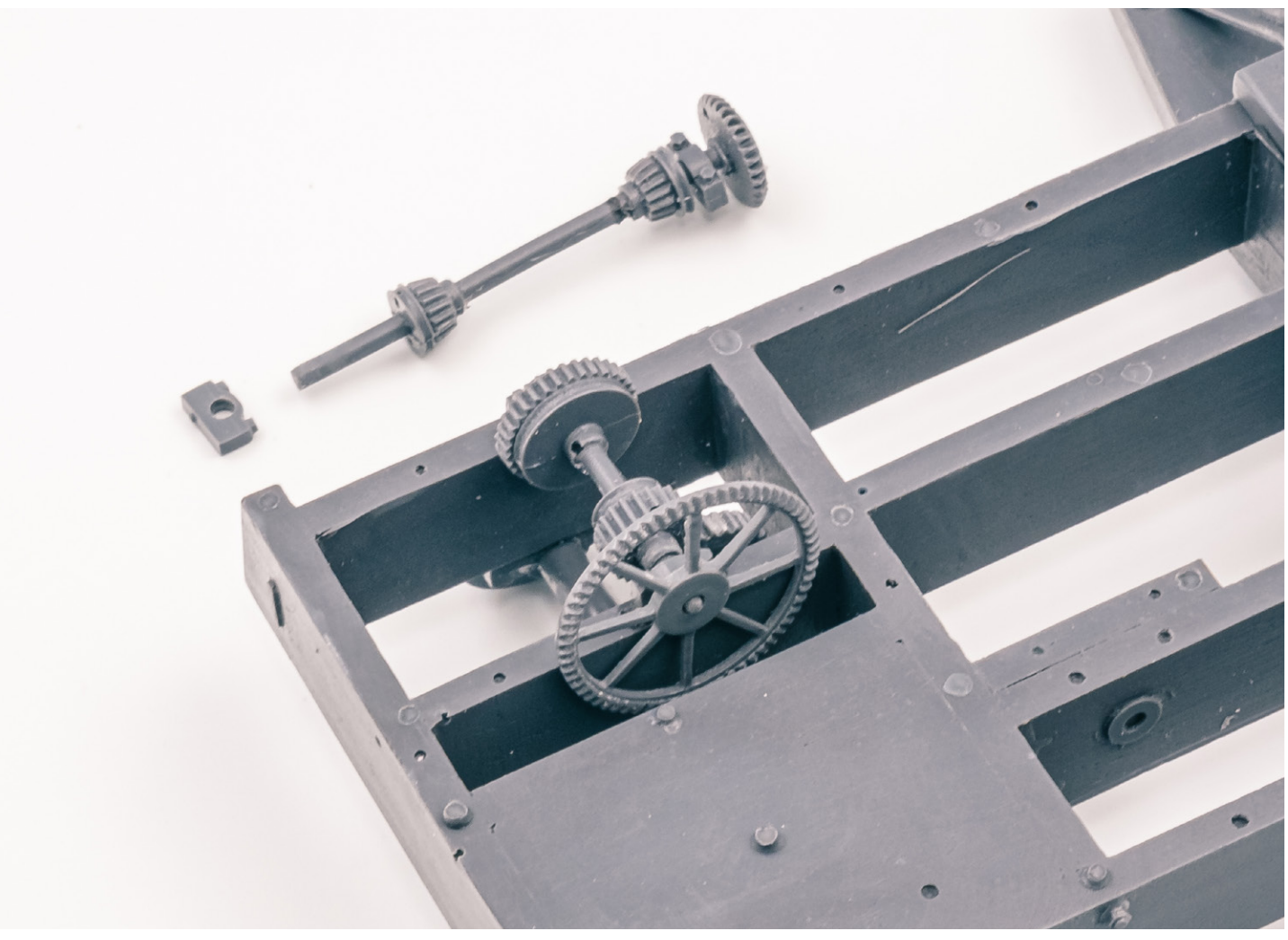

12. Leave the large beveled gear loose on the shaft you installed in step 10 so that you can adjust engagement when installing the next shaft. Prepare the shaft with two beveled gears between the journals and one beveled gear on the end. Use the appropriate journal to support the free end of this shaft and install it using the locating pins on the journals and the locating marks in the base frame.

13. Once the shaft from step 12 is installed, you can adjust the beveled gear for engagement onto the beveled gears on the shaft and glue it onto its shaft that was installed in step 10.

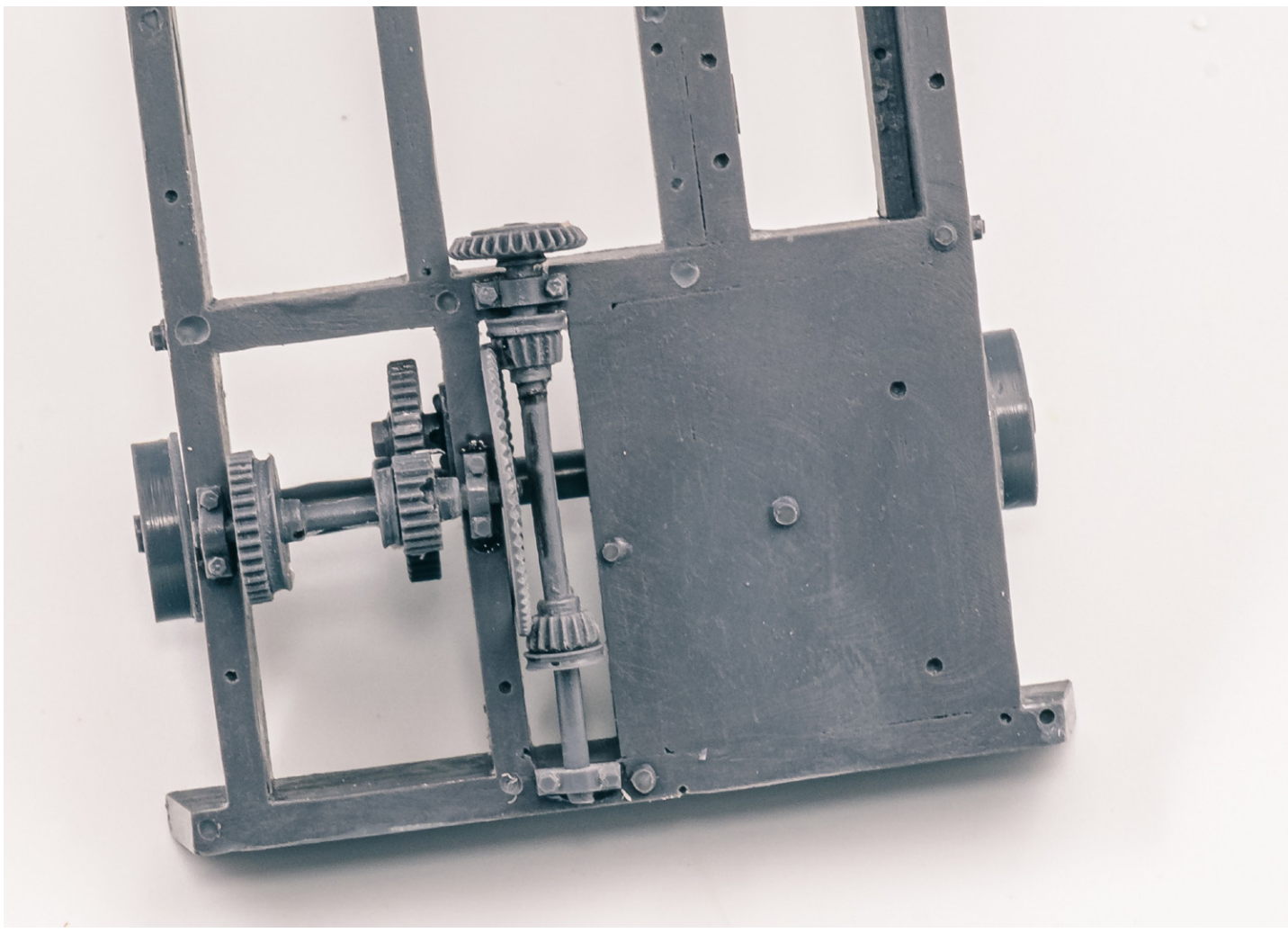

14. Another angle of the completed assembly from step 13.

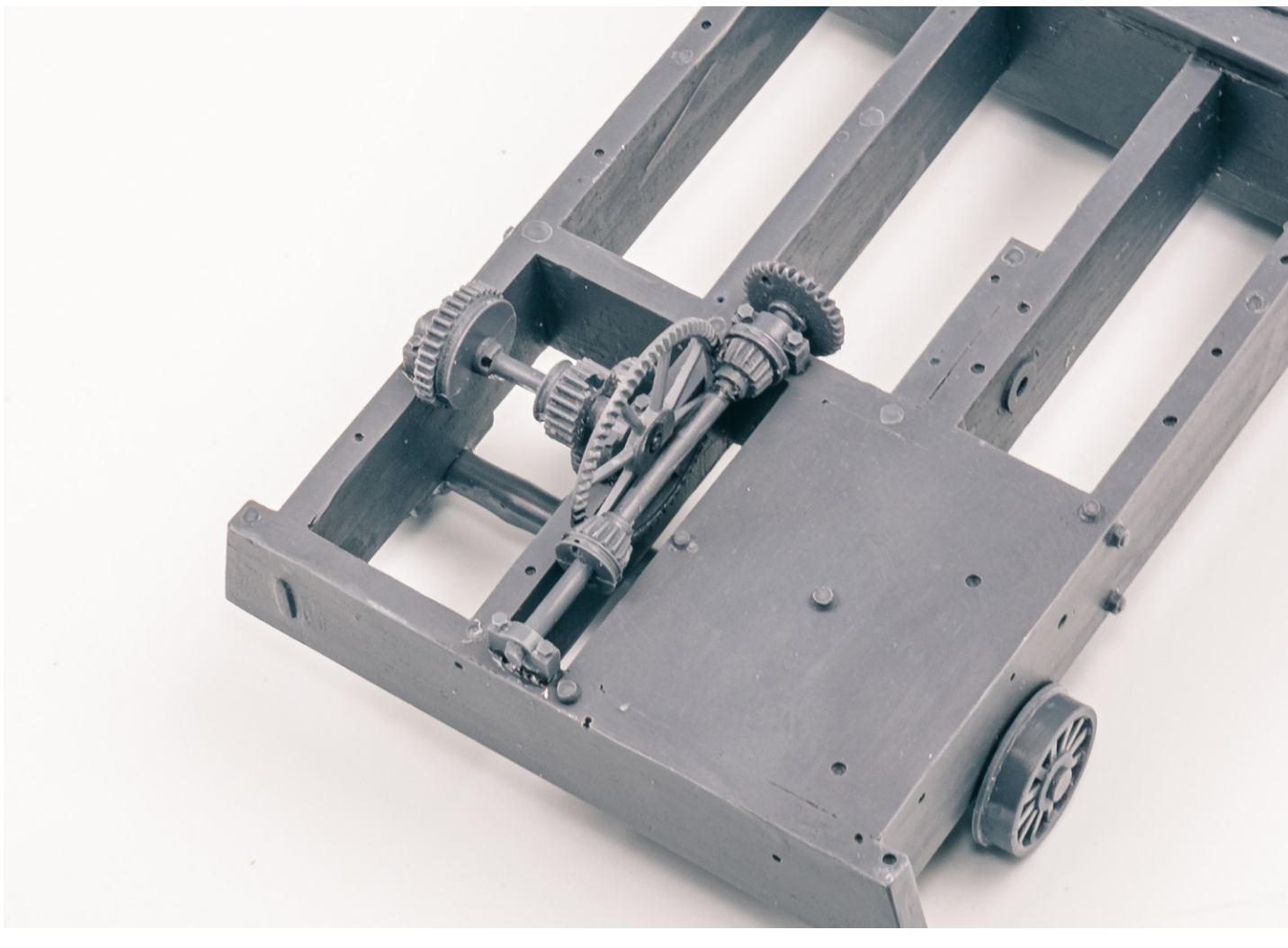

15. Now the shaft with the straight gear and beveled gear combination can be installed, interfacing with the shaft installed in step 12. Again, you'll need another journal to support the free end of the shaft, leaving enough overhang outside of the base frame to install the flywheel. Note that there are no gear teeth on the flywheel. If you would like, you may leave the flywheel off until you've completed step 98 to allow for easier access to the divot in the side of the base frame.

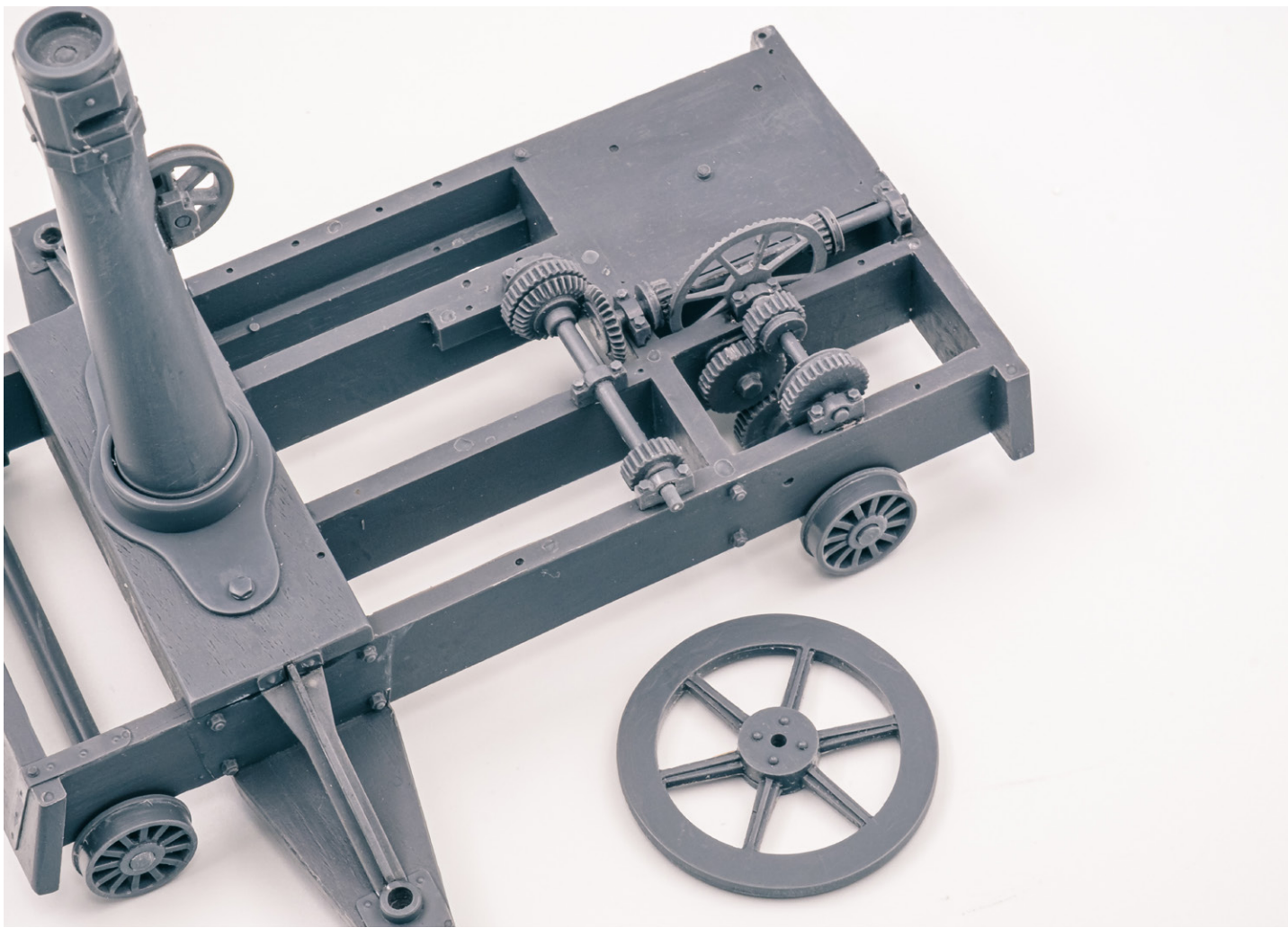

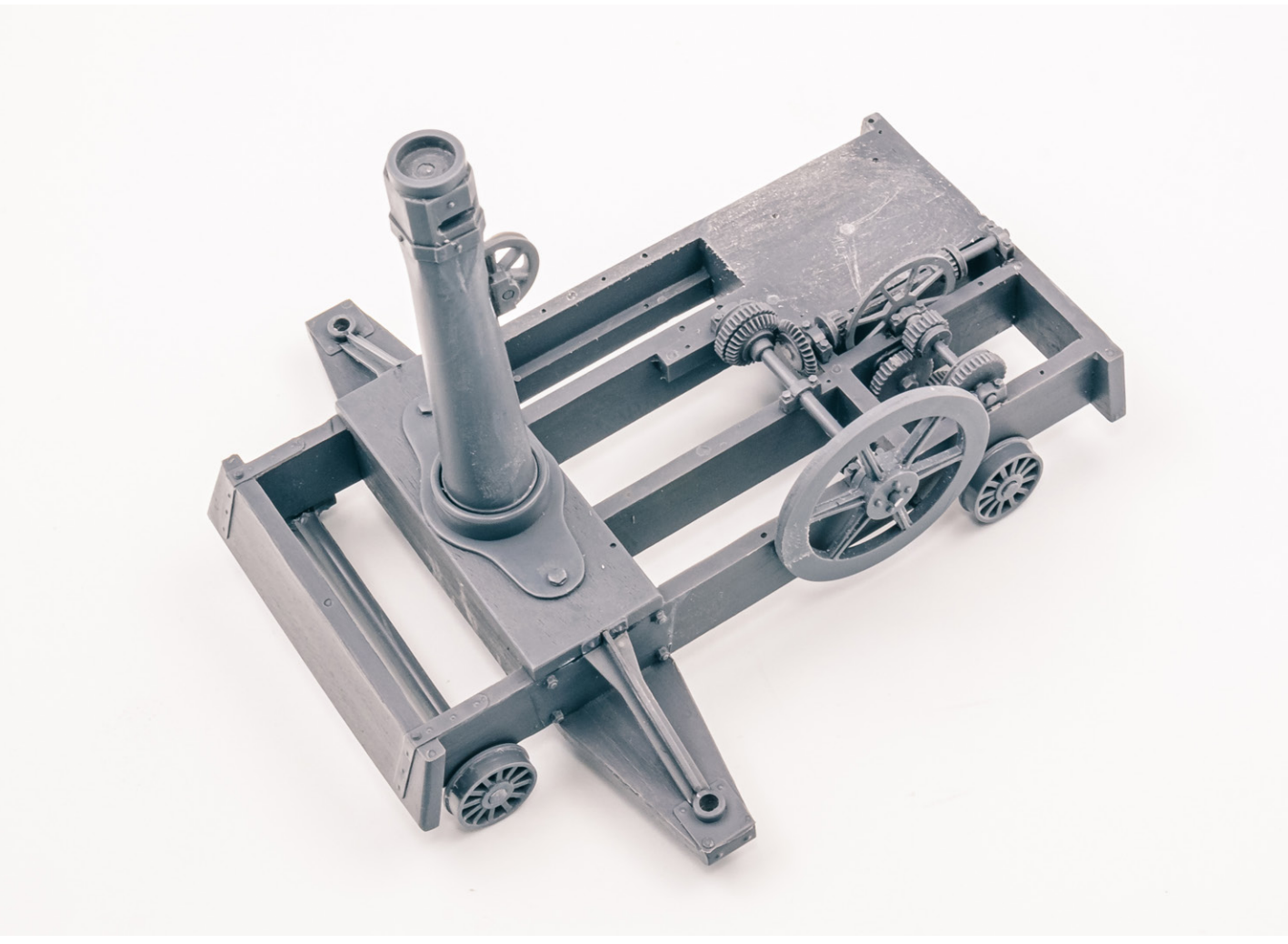

16. The flywheel installed and main mast installed. Install the main mast with the wheel installed in step six facing the rear of the base frame. The base of the main mast is notched to accept the corresponding step in the base frame.

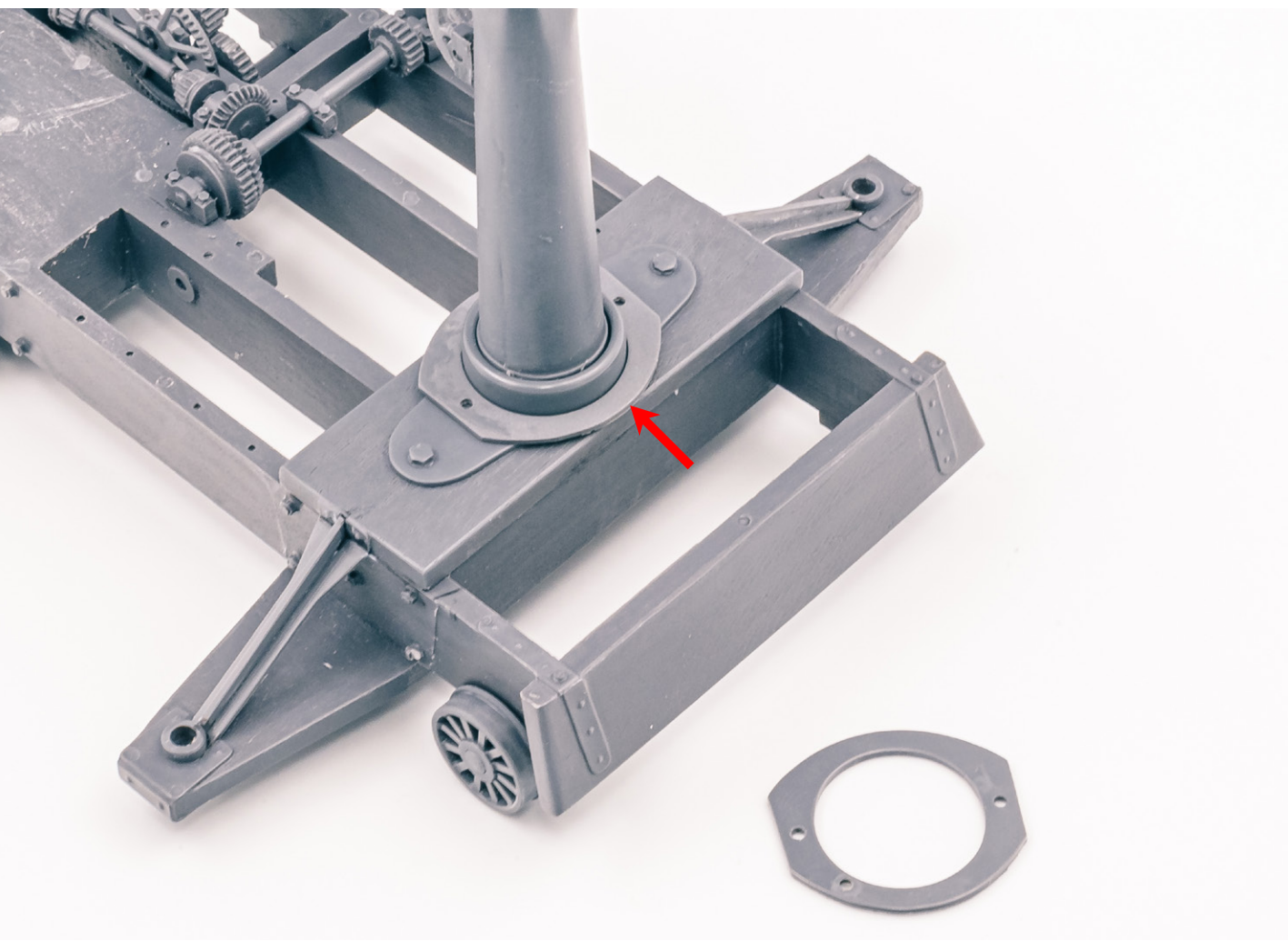

17. Slip the main boom collar over the main mast, leaving it free for now to position it correctly once the main mast is installed. Set the base frame aside for now.

18. Using four of the straight, short journals, install the set of chain guides for left and right rotation of the mast assembly into the recess of their support plate. Check the height of the journals compared to step 20. These chain guides do not have windows and have a shaft that is equal length on either side of the guide. Install the other set of chain guides with a hex cap nut on side and a free axle on the other into the corresponding holes in the top of the support plate.

19. Here are the chain guides installed.

20. The journals for the set of chain guides should just stand proud of the support plate and should partially cover the axles of the chain guides.

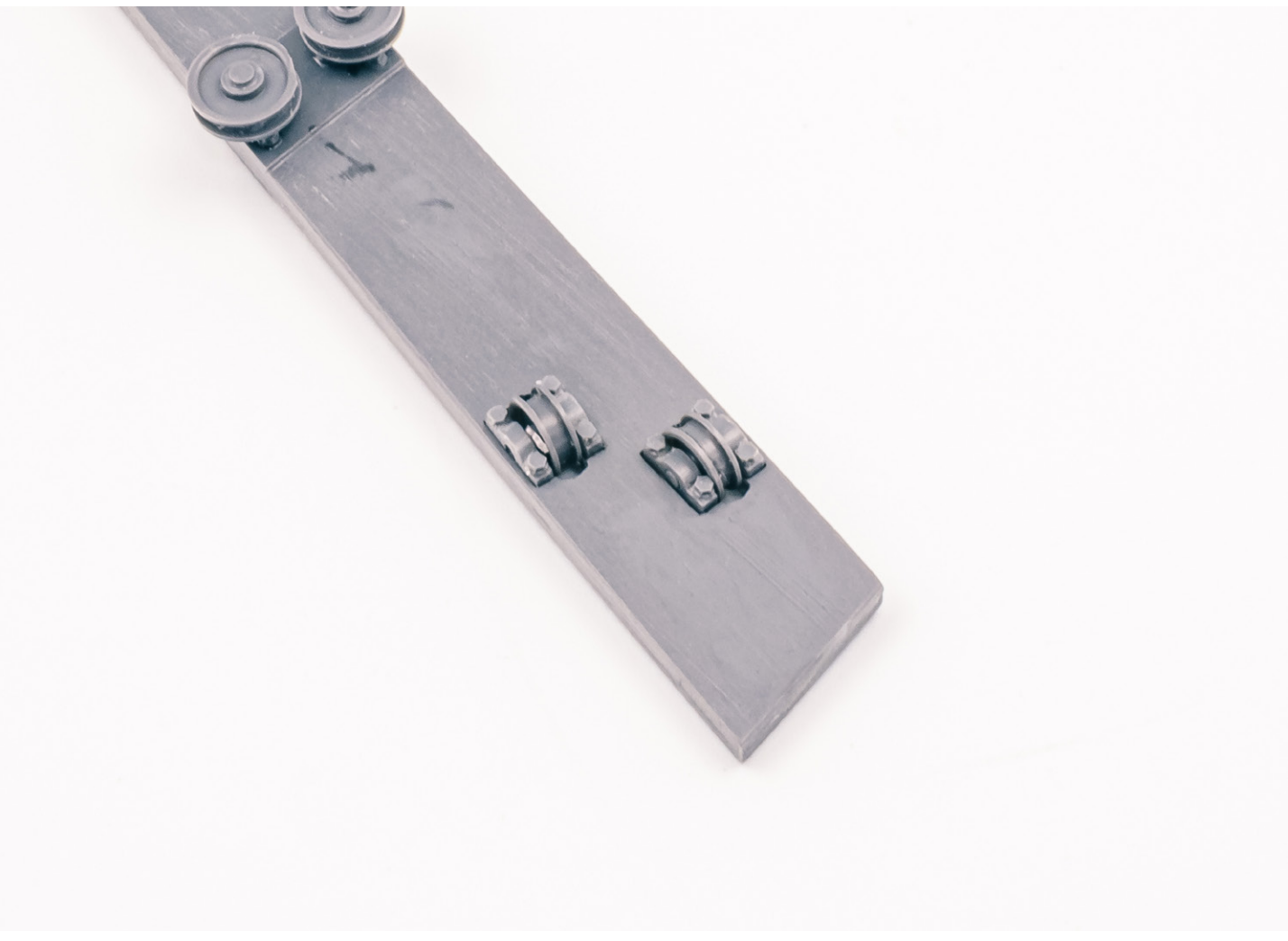

21. Install the flat board to the support plate, noting the oblong locating pin on the underside of the support plate that lines up with the same-shaped recess in the flat board. The two nuts on the flat board should face out and be the furthest from the chain guide support plate.

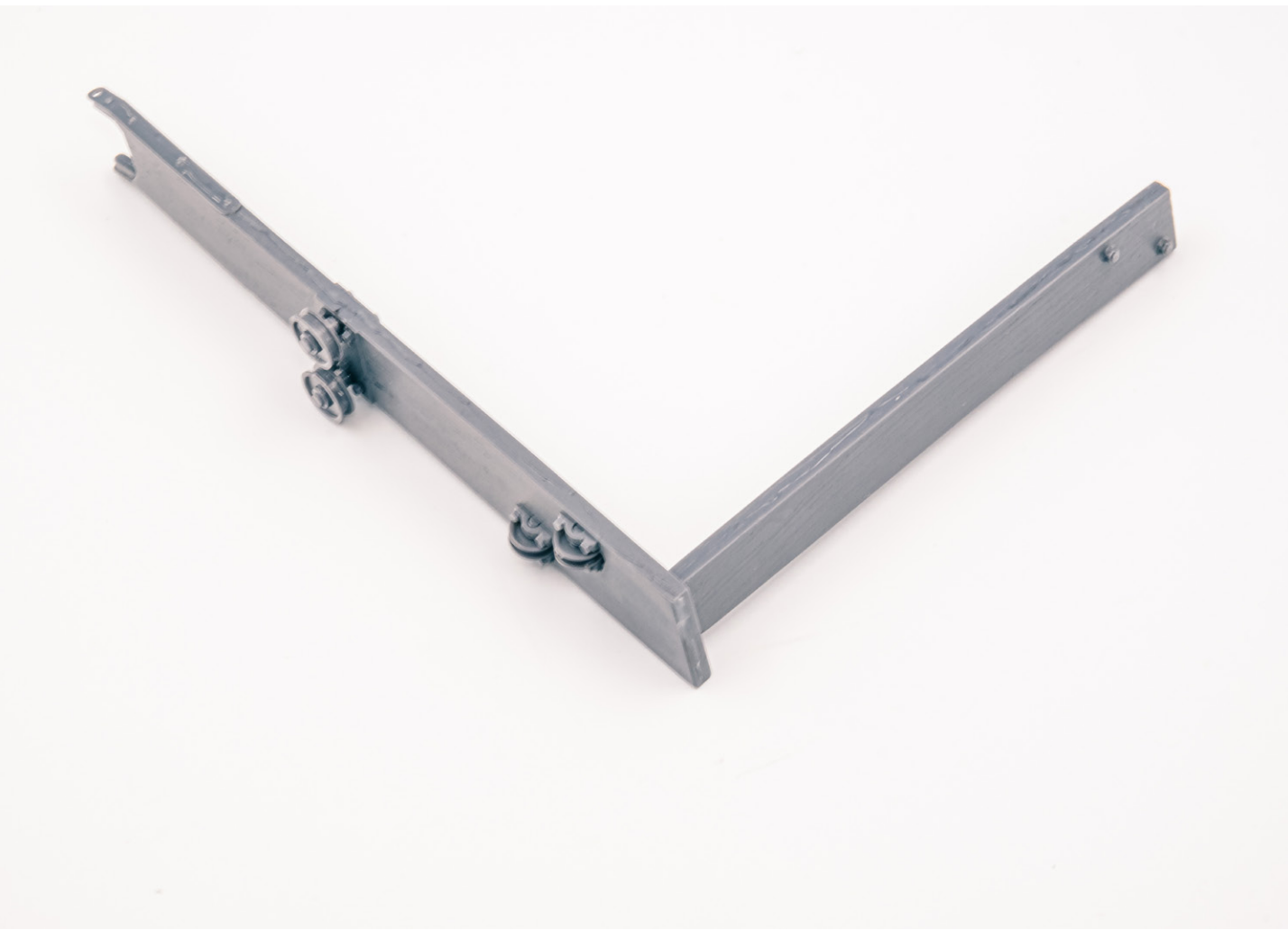

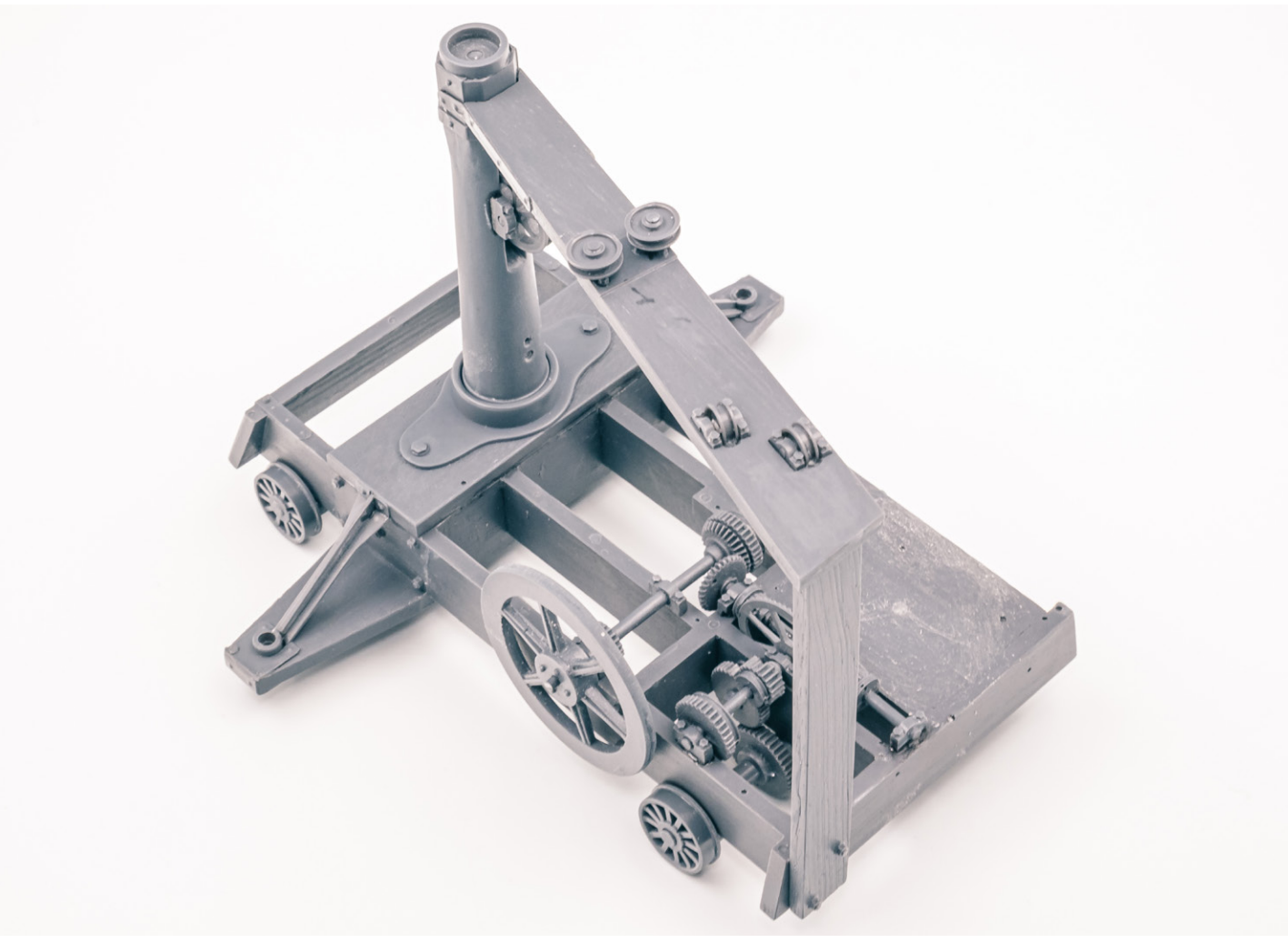

22. Install the chain guide support plate onto the main mast and the base frame. The "ears" of the support plate go into the notches on the main mast and the recess in the flat plate lines up with the same-shaped locating pin on the back vertical plate of the base frame.

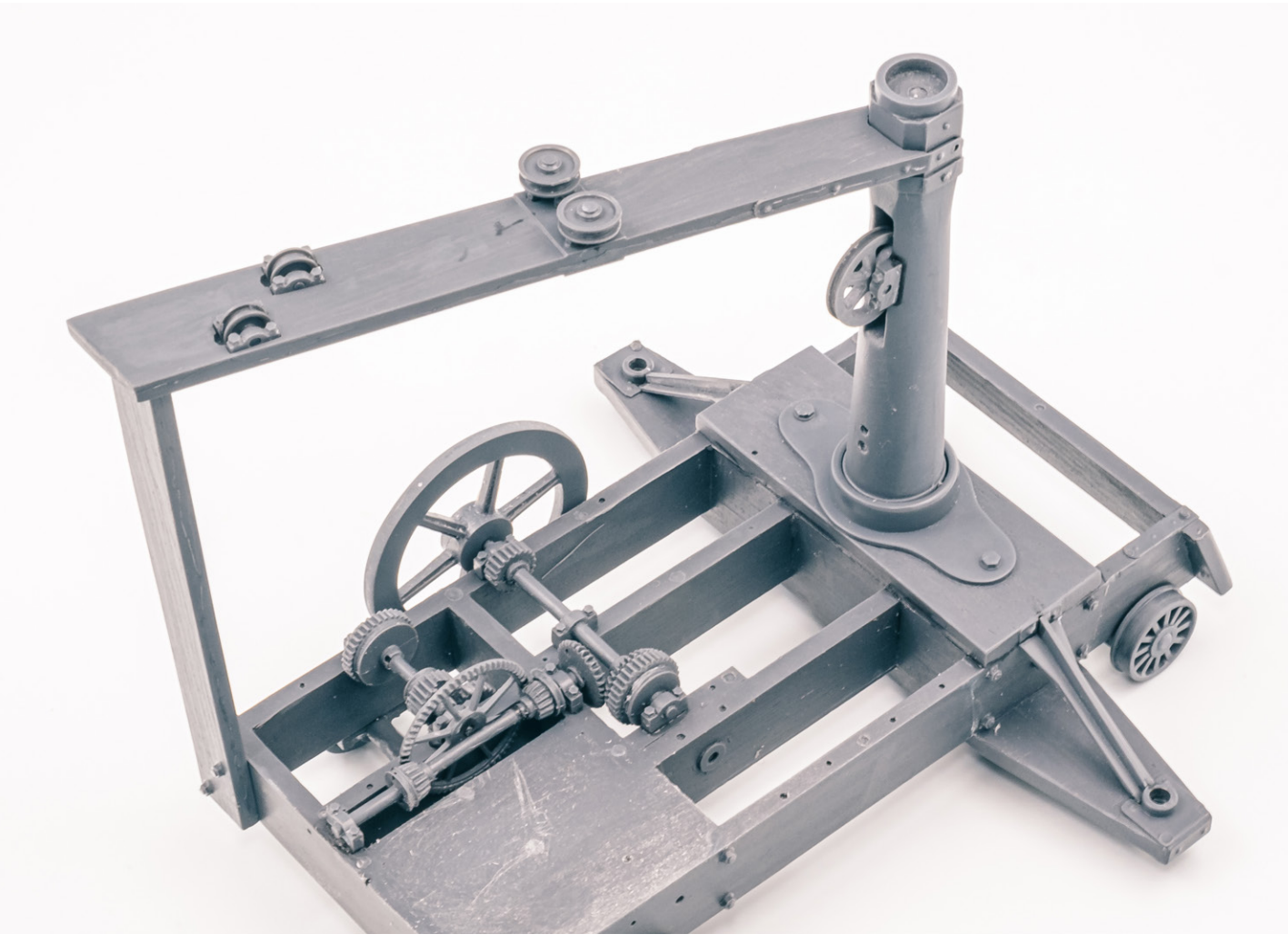

23. The base frame assembly is complete for now, as we'll need to assemble the main boom before continuing assembly of the gear-train and main base.

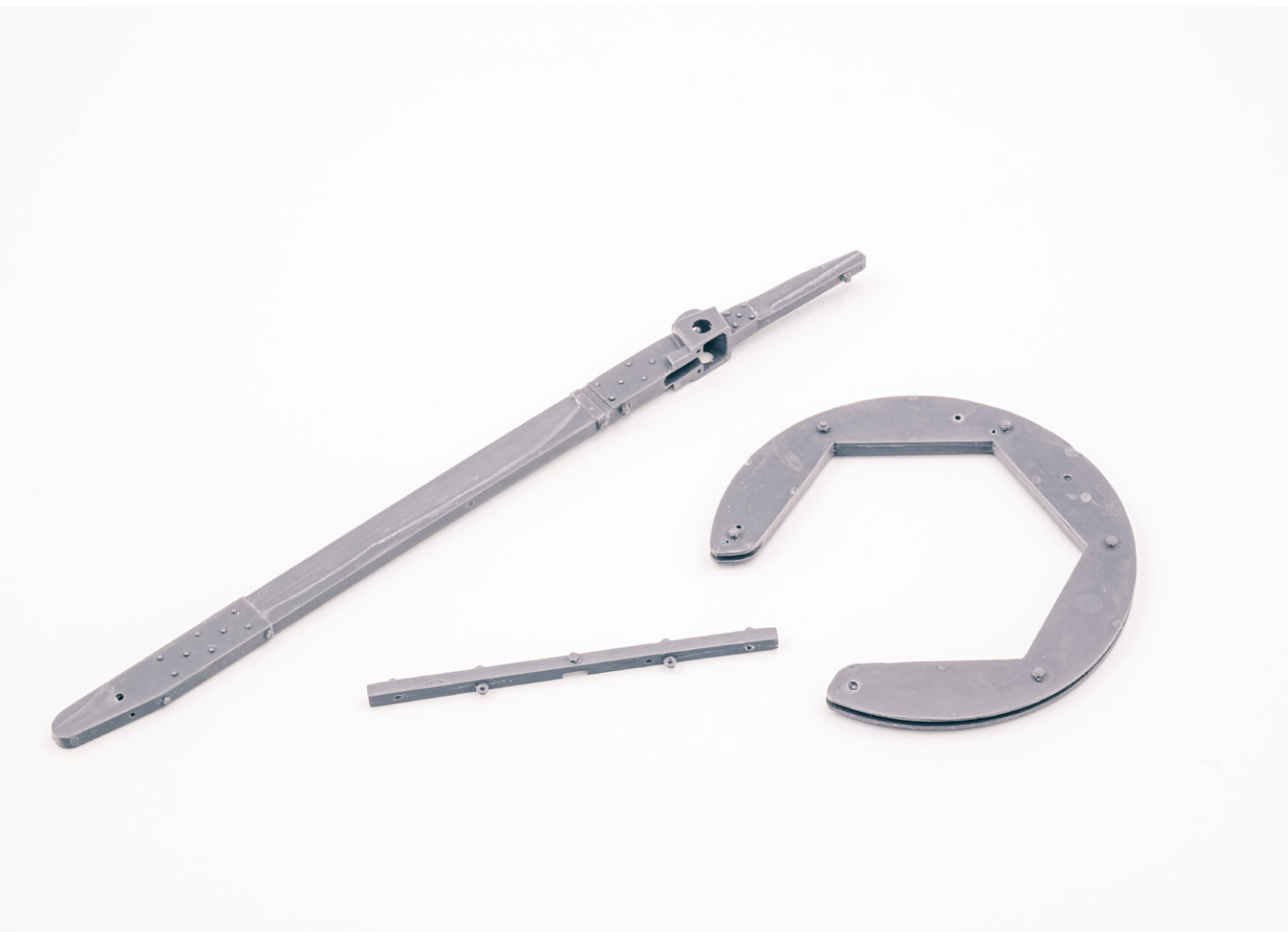

24. Prepare the main boom arm along with its rotating plate and support beam.

25. The main boom arm has a locating pin that lines up with the divot in-between two nuts on the rotating plate. Dry-fit the main boom in place and proceed to step 26 before gluing the main boom to its rotating plate.

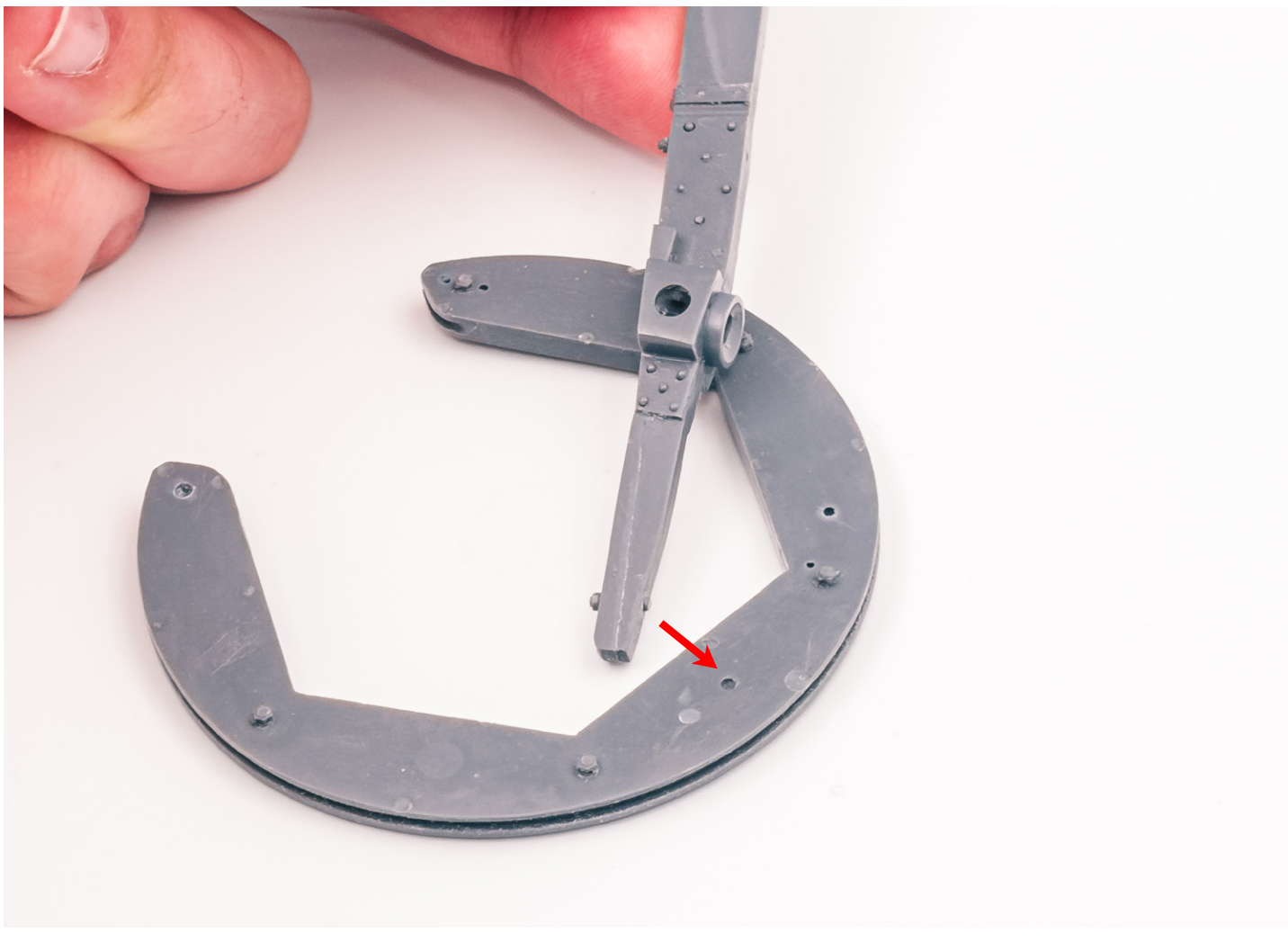

26. Using the support beam for the main boom, square the main boom up with the rotating plate so that it passes through the center of the rotating plate and glue everything in place. Note that the eyes of the hooks on the support beam face the long end of the main boom. The support boom should be as far forward on the flat area of the main boom as possible, splitting the width of the support beam with the ears coming off of the main boom. The ears are pointed out to the right.

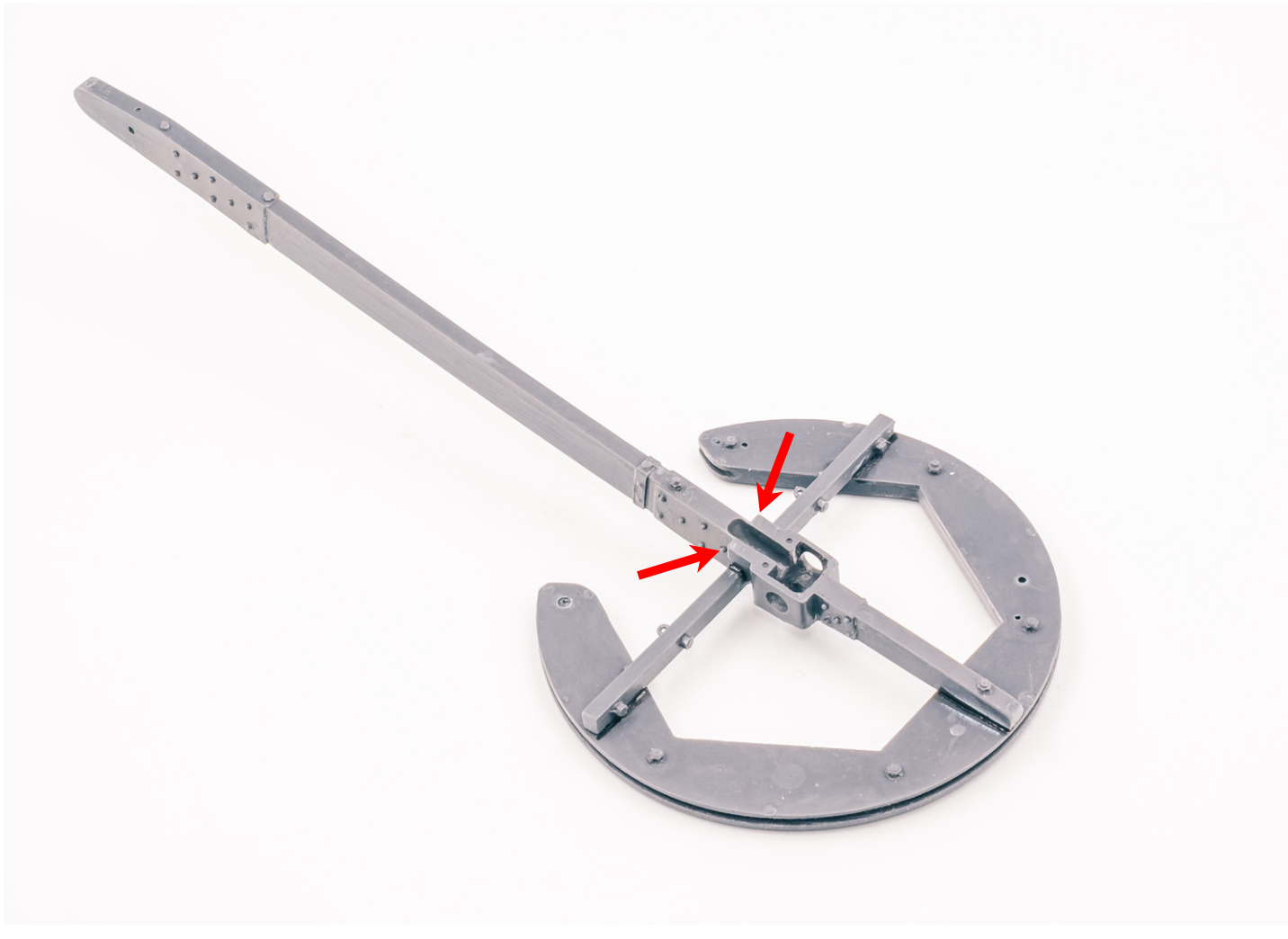

27. Another angle of the rotating plate and main boom assembly.

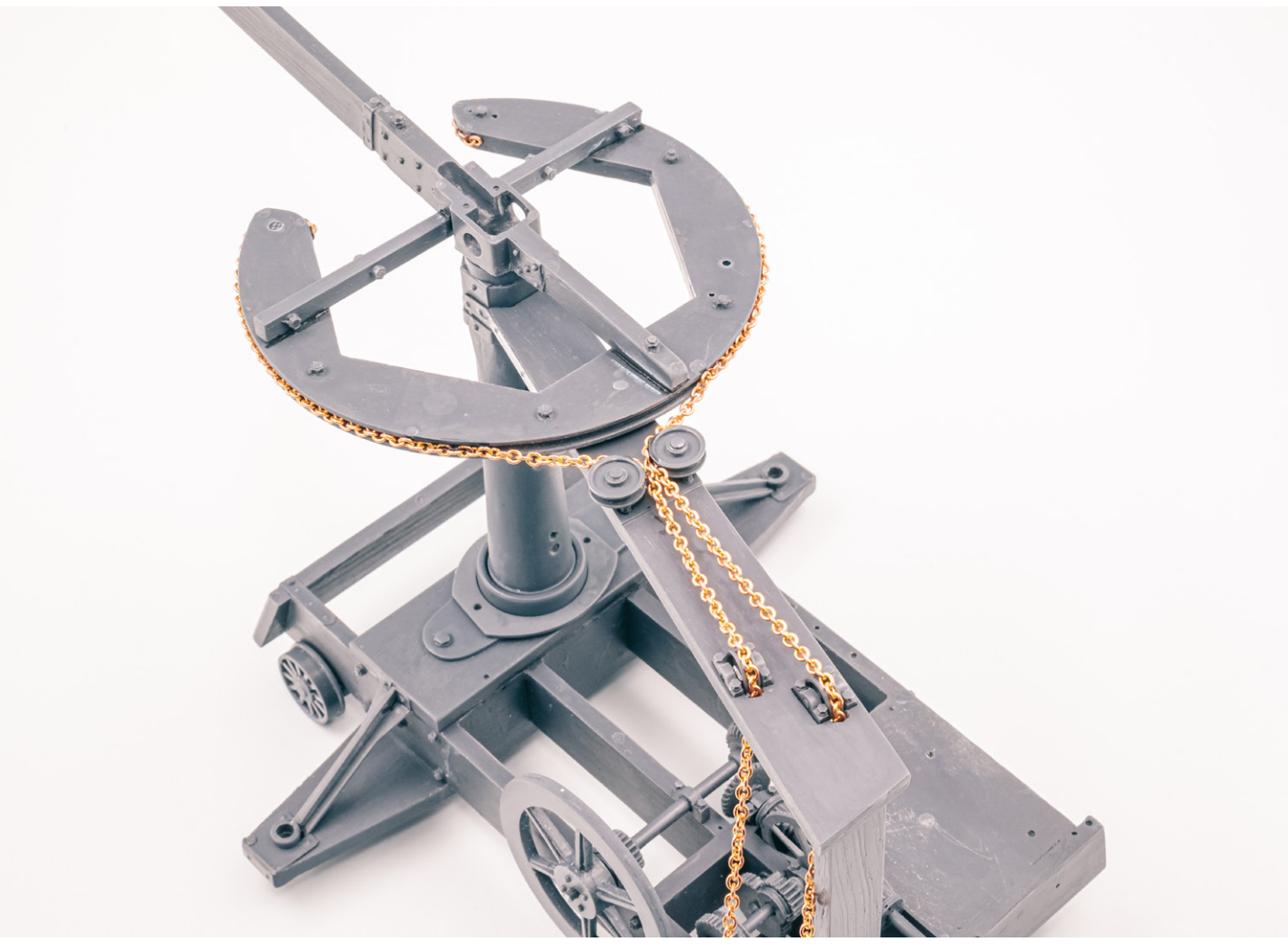

28. Dry-fit the boss on the bottom of the main boom into the main mast. Cut 14" of chain for the left side of the rotating plate and 15 and 7/8" for the right side of the rotating plate. The handedness of the plates are called out in the picture on the left. If you'd like change the rotation of the main boom assembly you may need to adjust your lengths of chain, see step 29. Glue the corresponding chains to the front interior of the rotating plate, where the grooves for the chain stop. Feed the chains through the interior of the vertical chain guides, then over the chain guides recessed into the support plate, and finally down through the gap between the recessed chain guides and the support plate.

29. With the short spool, glue the free end of the left chain on the pin on the gear side of the spool such that when it is wrapped counter-clockwise as viewed from the gear side of the spool, it does not double-over itself while wrapping. Glue the free end of the right chain on the pin furthest from the gear on the spool such that when viewed from the chain, it will wrap clockwise around the spool. The chain lengths are fixed and the principle of operation is that when the spool rotates, one length of chain gets shorter, pulling that side of the main boom in and the other chain lengthens, allowing the other side to have enough chain for movement. For example, if I would like the main boom to be swung left, I would have more wraps of chain on the gear side of the spool, and less on the far side of the spool. You will need to adjust the length of chain accordingly if you choose to change the orientation.

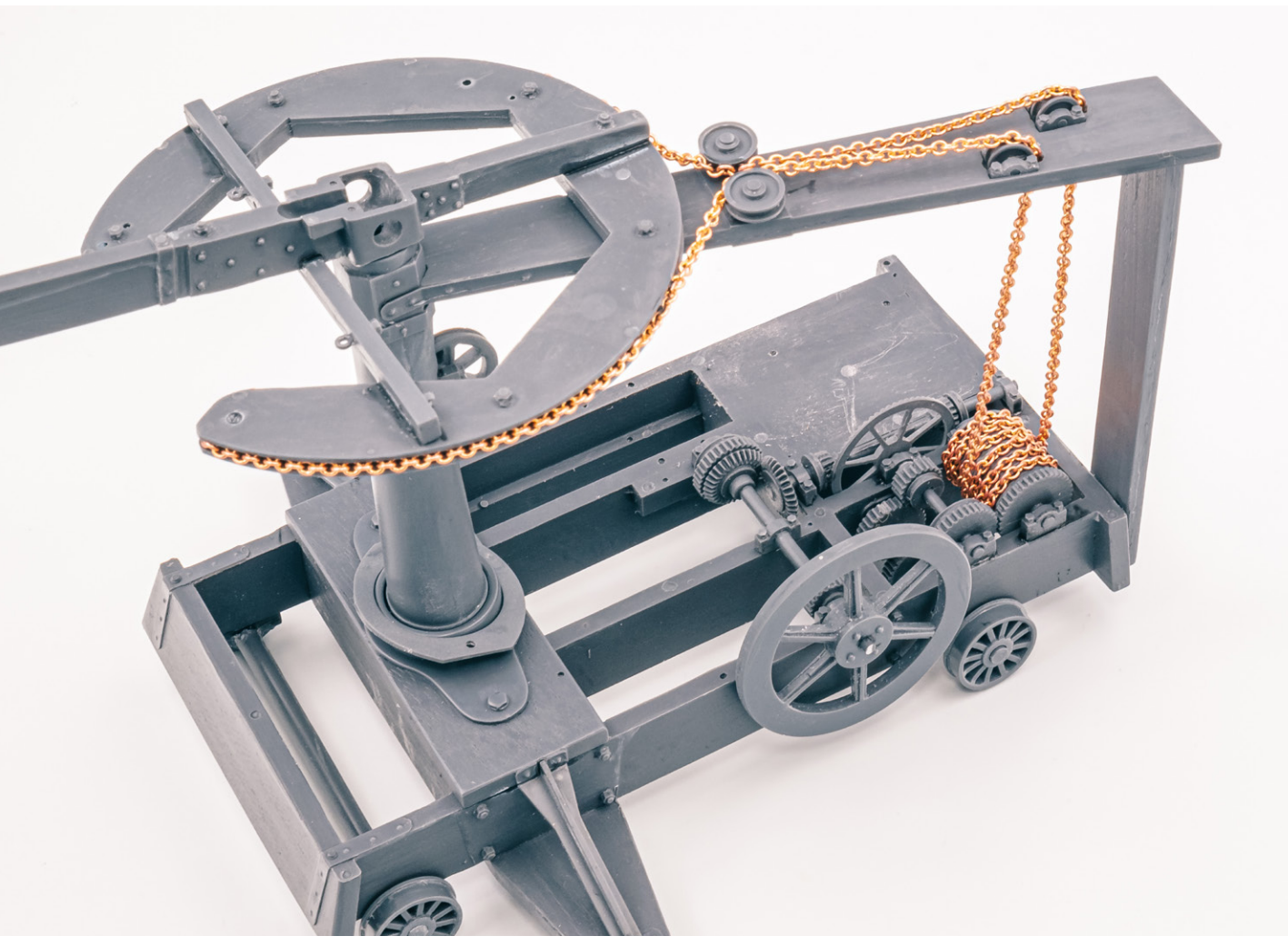

30. With the suggested lengths of chain in step 28, there short spool will sit flat on the frame and mesh with the gear-train. If you would like to position the main boom differently, you will need to adjust your lengths of chain and wraps such that the short spool sits flat on the base frame and meshes properly with the rest of the gear-train. Using the suggested lengths and incomplete wraps will result in the spool not laying flat.

31. With the main boom in place, it's time to assemble the support frame for the main boom. There are several long bolts that correspond to nuts on the other side of the support frame. You should not have to adjust the lengths of the bolts beyond some minor sanding depending on how much material you left when removing them from the casting block.

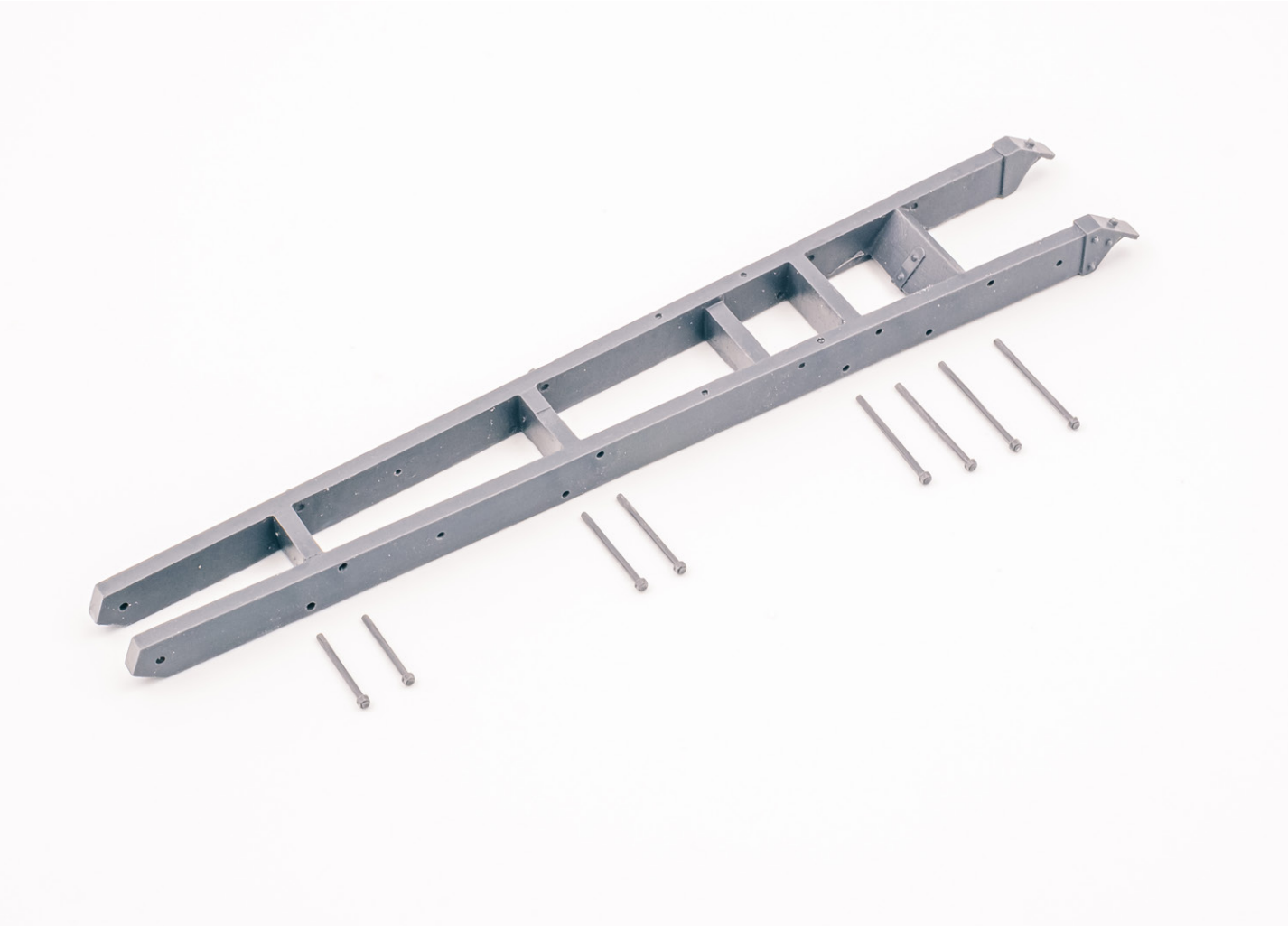

32. With the bolts installed in the support frame, the joining bracket between the main boom and the support frame can be attached to the support frame.

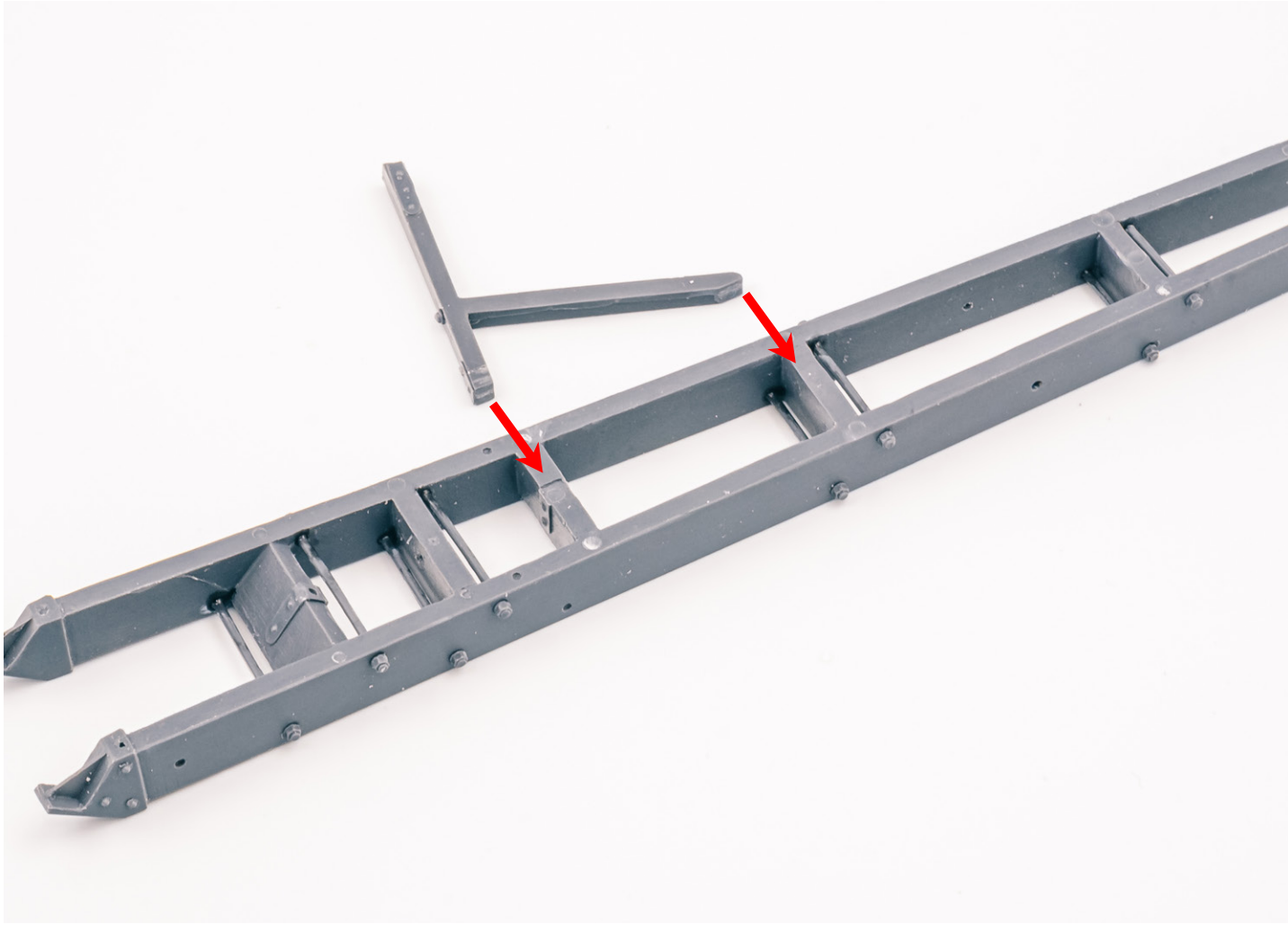

33. The joining bracket attached to the support frame. The crooked lever with journal is installed using the locating pins on the journals and the corresponding locations on the support frame, just below the joining bracket.

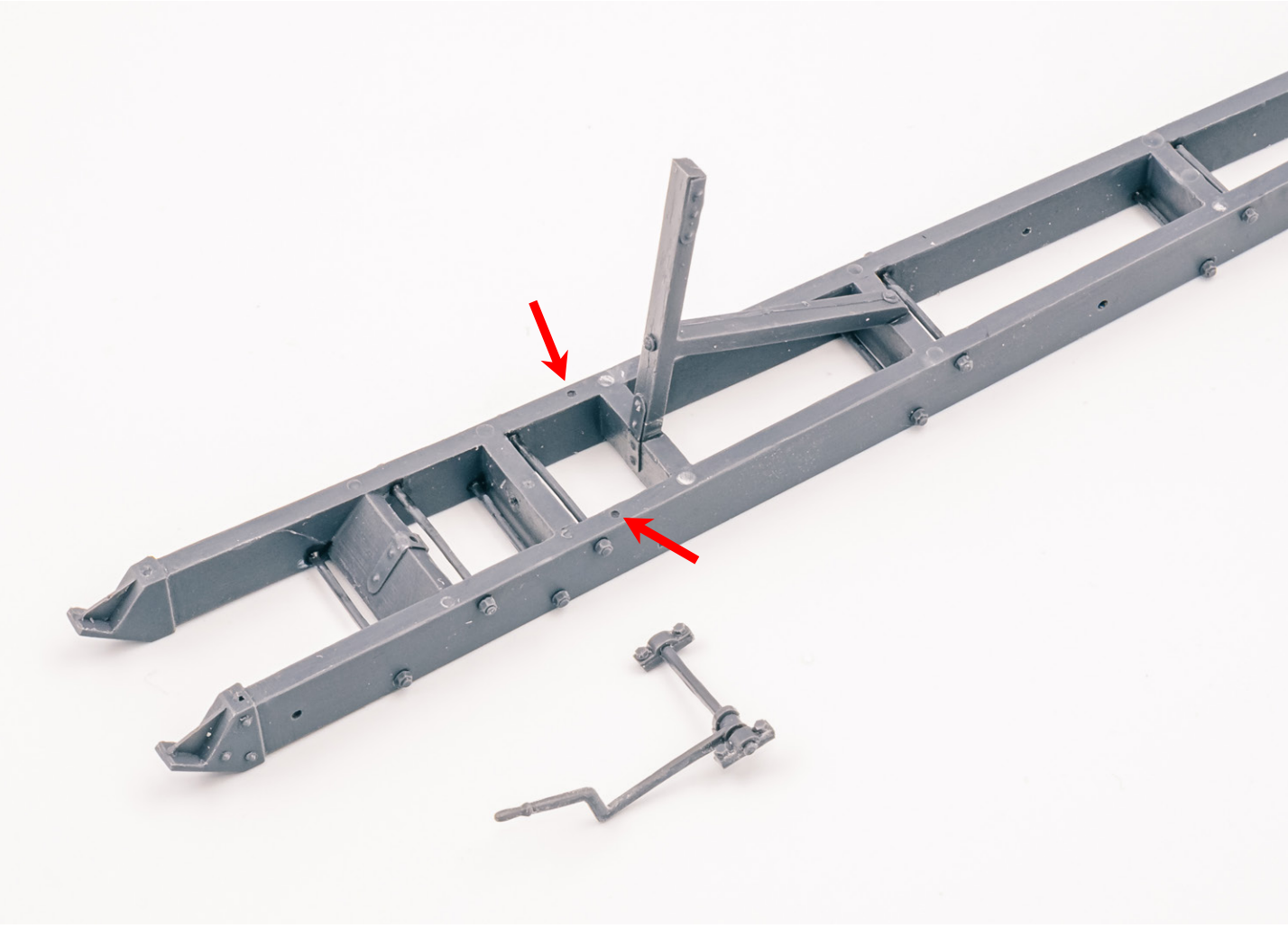

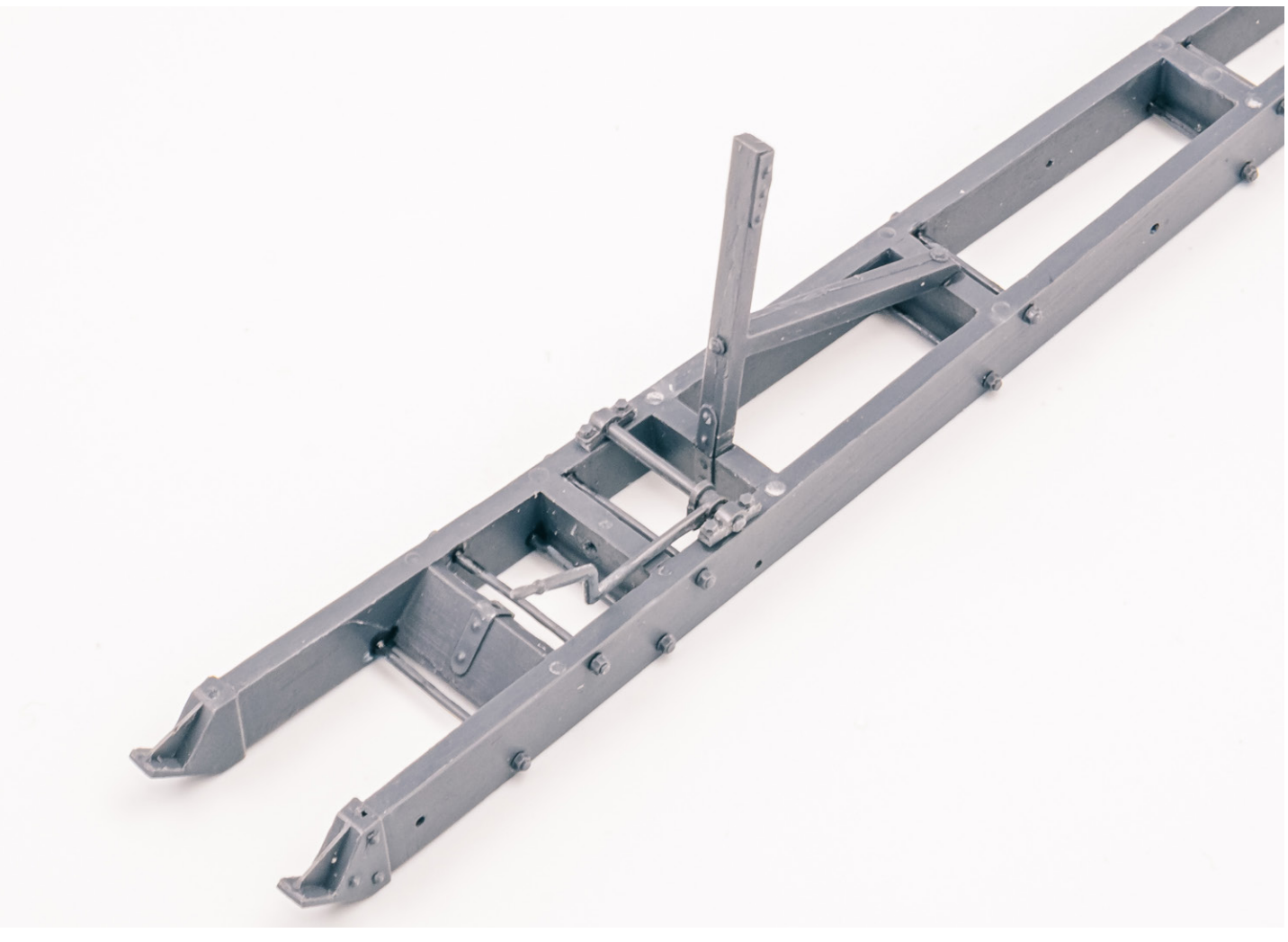

34. The crooked lever installed below the joining bracket.

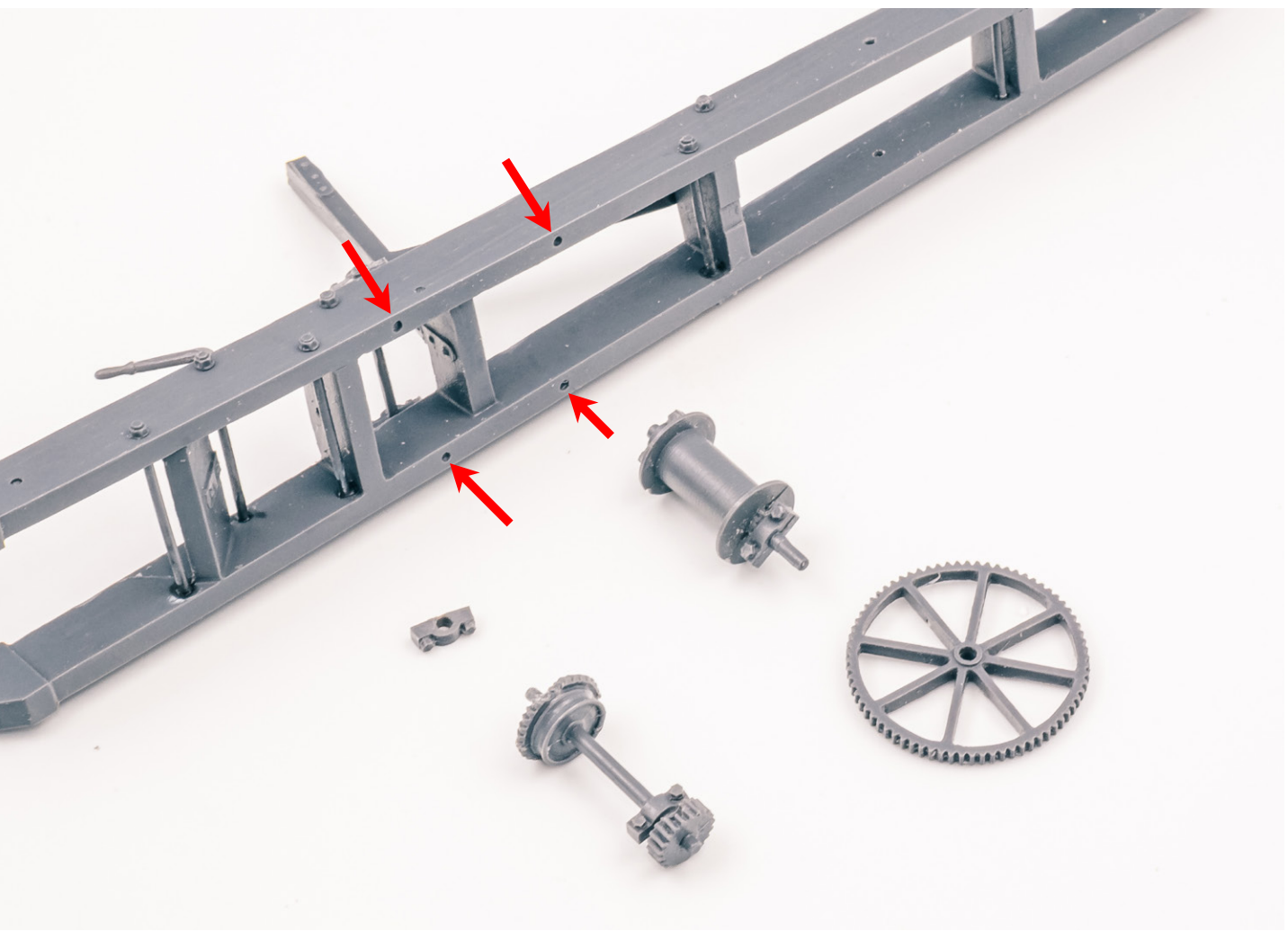

35. Flip the support frame over and install the gear shaft with one beveled gear and an overhung straight gear. Use the appropriately sized straight journal on the free end of the shaft to hold the free end of this shaft in place to the support frame. Install the smooth spool in-between the support frame, using the locating pins to locate it, do not yet install the large gear on long end of this shaft so that it can be appropriately meshed with the geared shaft.

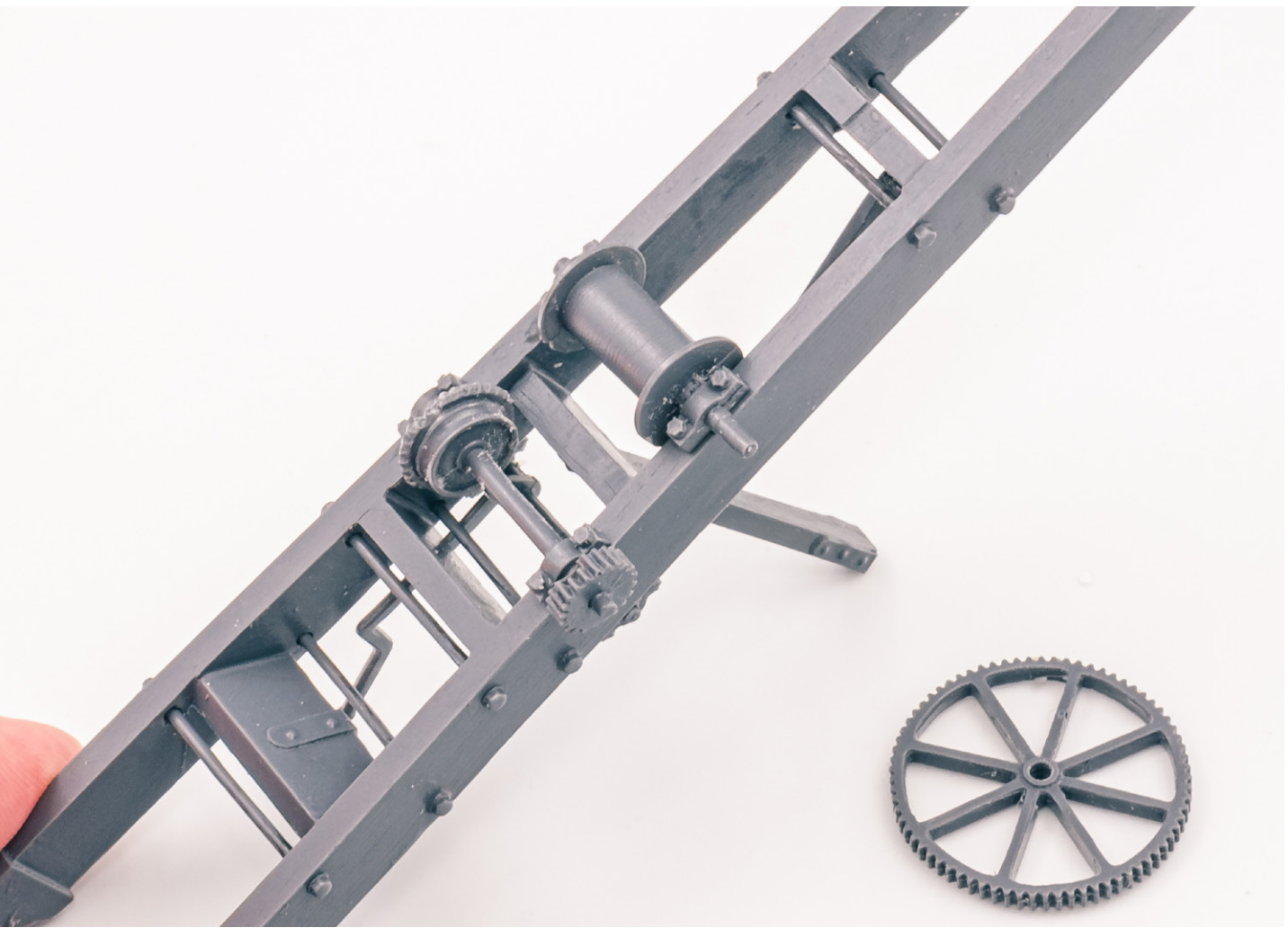

36. Now that the geared shaft and smooth spool are installed, install the large gear onto the free end of the smooth shaft, meshing it with the geared shaft installed in step 35. The large gear here is the gear pictured in the middle of step 11.

37. The large gear installed into place and meshed with the overhanging gear on the geared shaft.

38. Another angle.

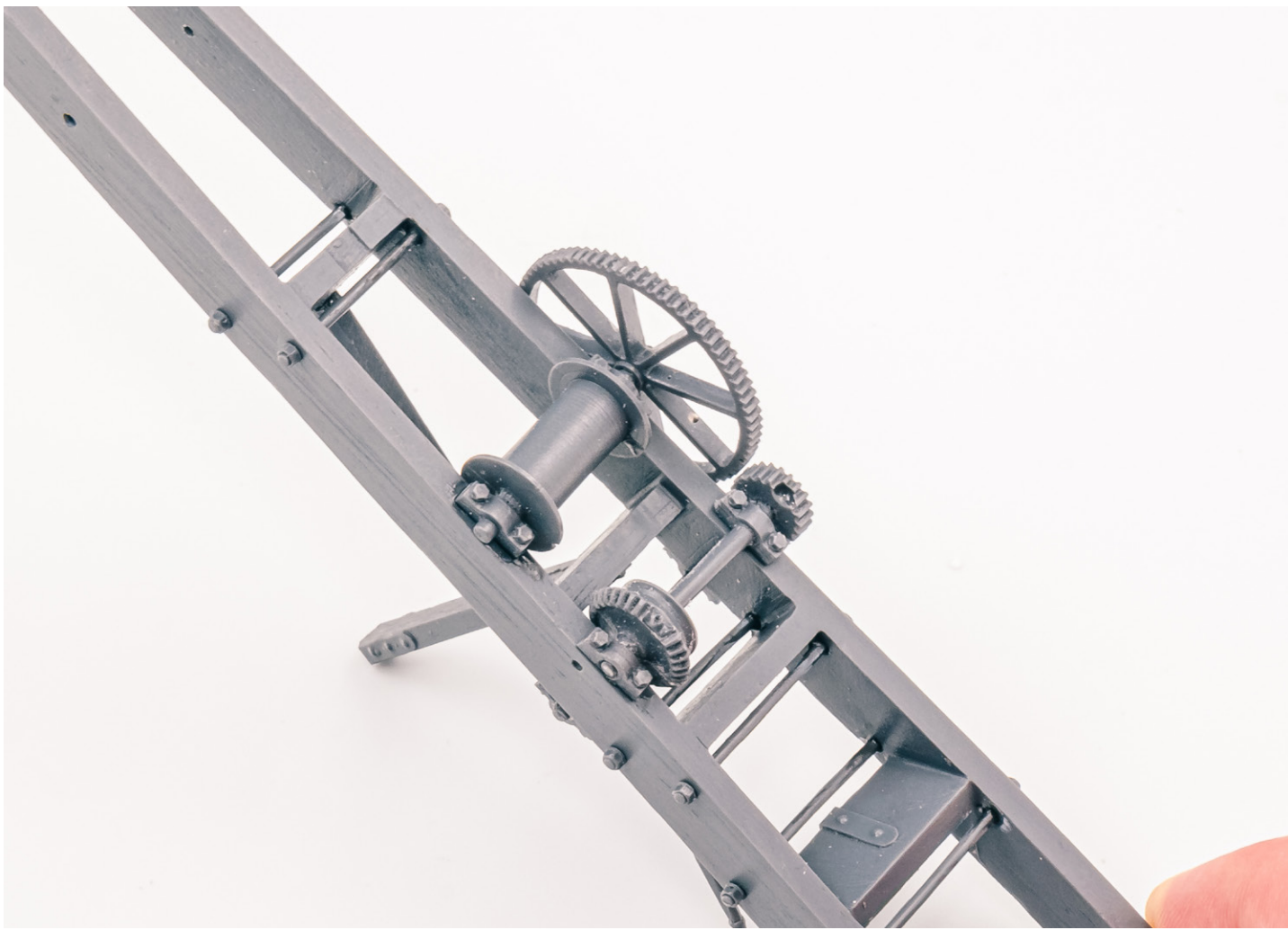

39. Install the platform with the angled bracket onto the right hand side of the support frame. There is a locating pin on the platform with a corresponding divot on the support frame.

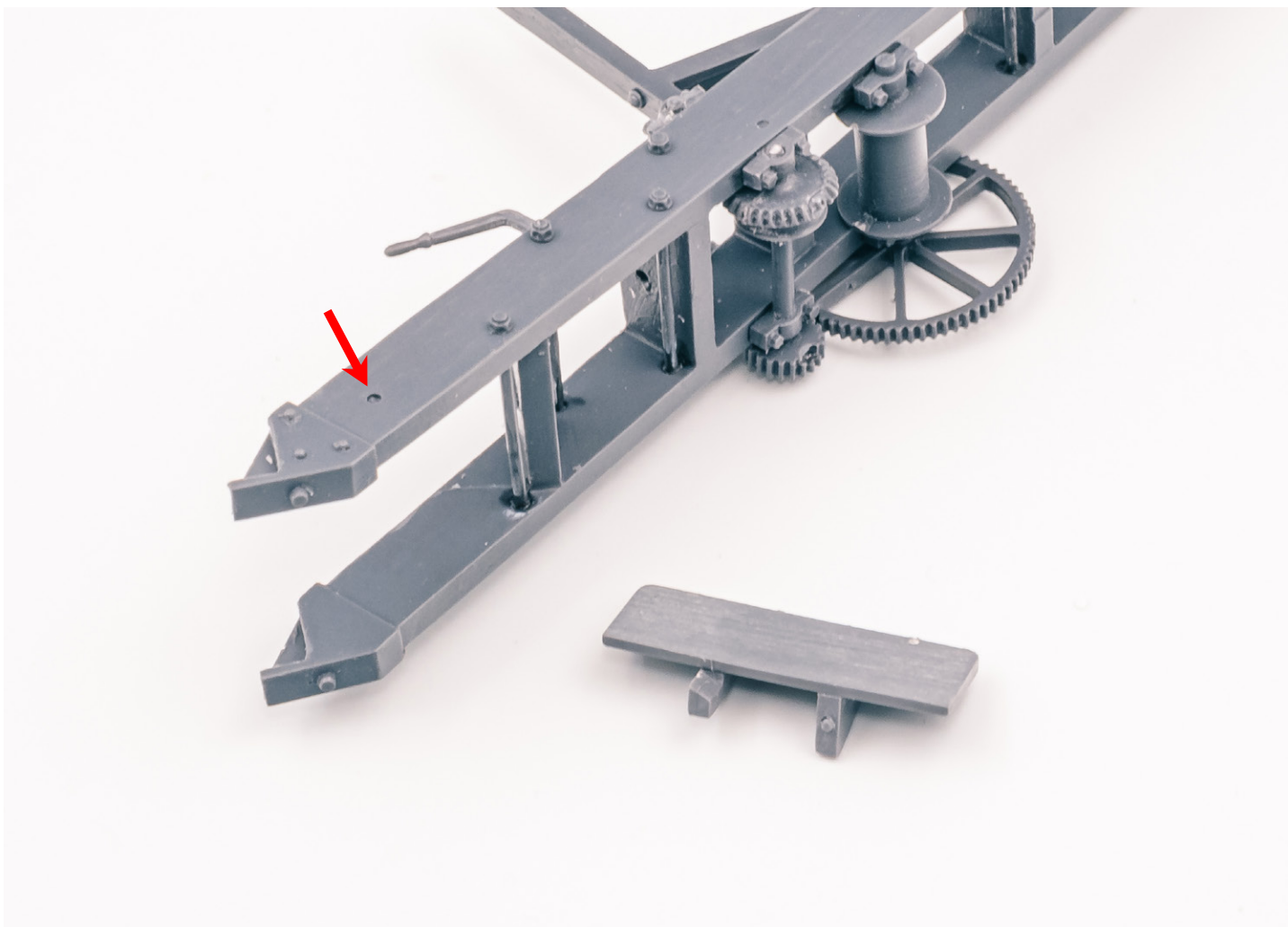

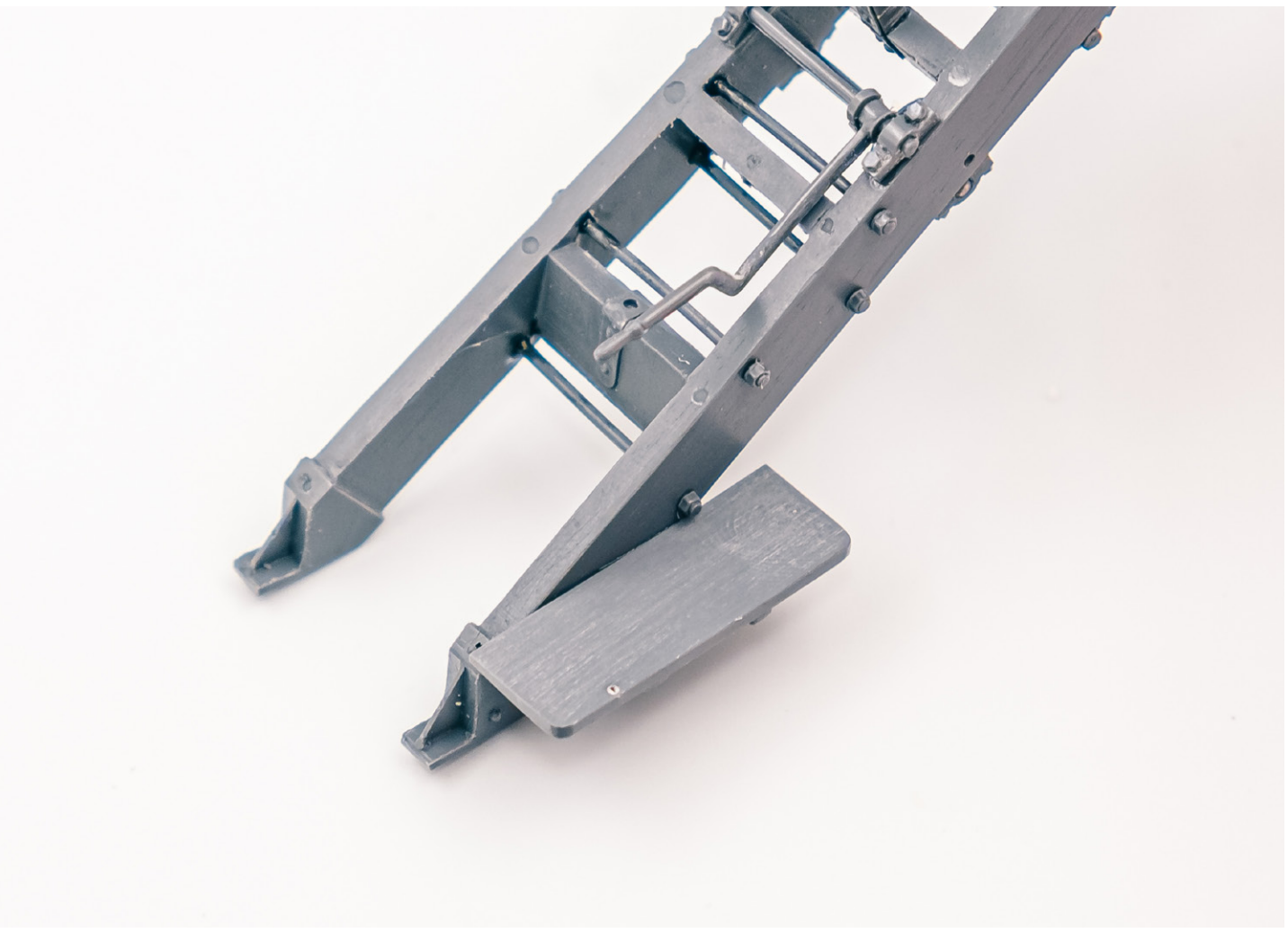

40. The platform installed.

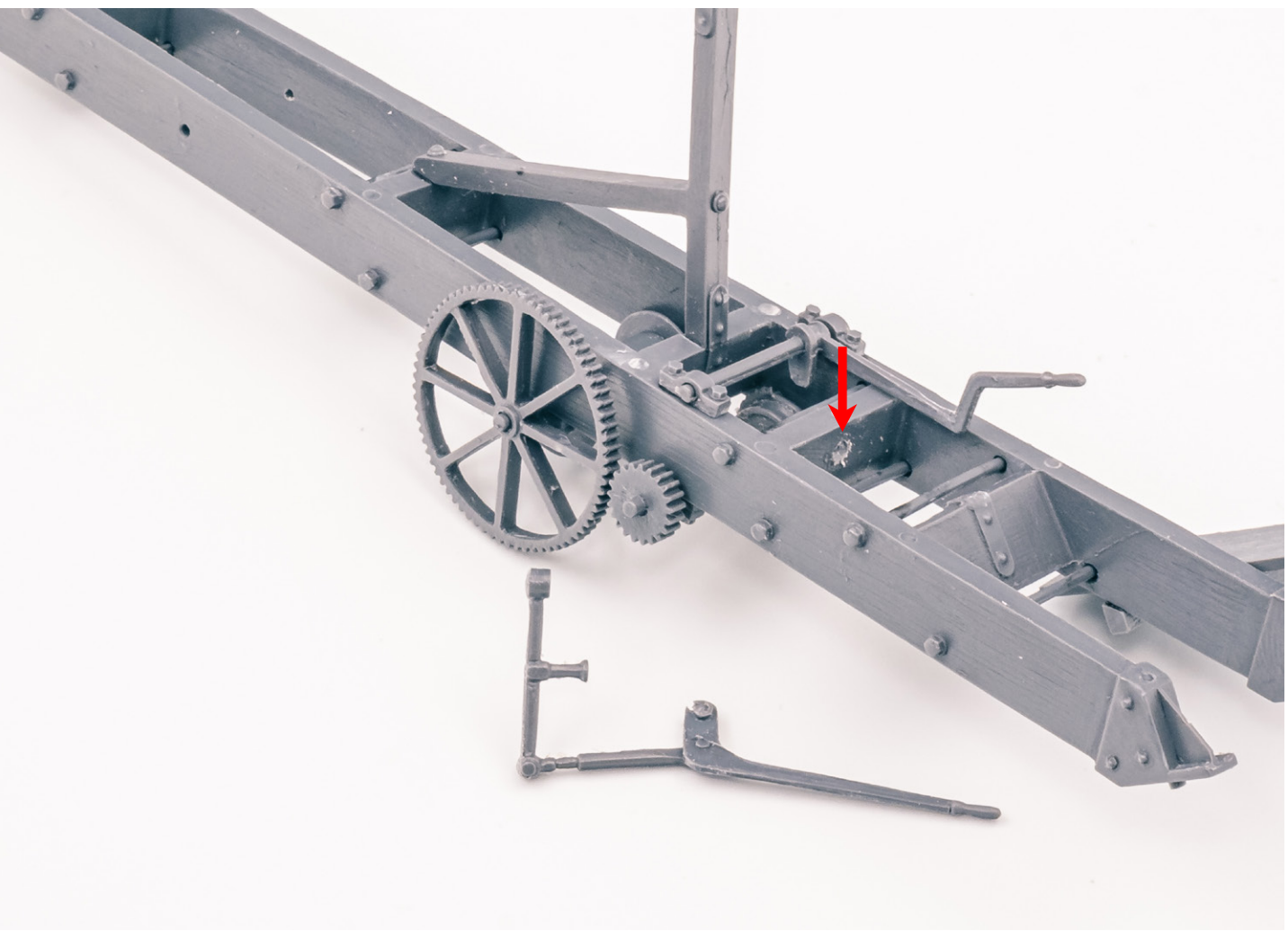

41. Now the actuation lever for the overhanging gear installed in step 35 can be installed. There is a pivot point on the crossbar of the support frame and the lever has a corresponding bump to line up with this pivot point.

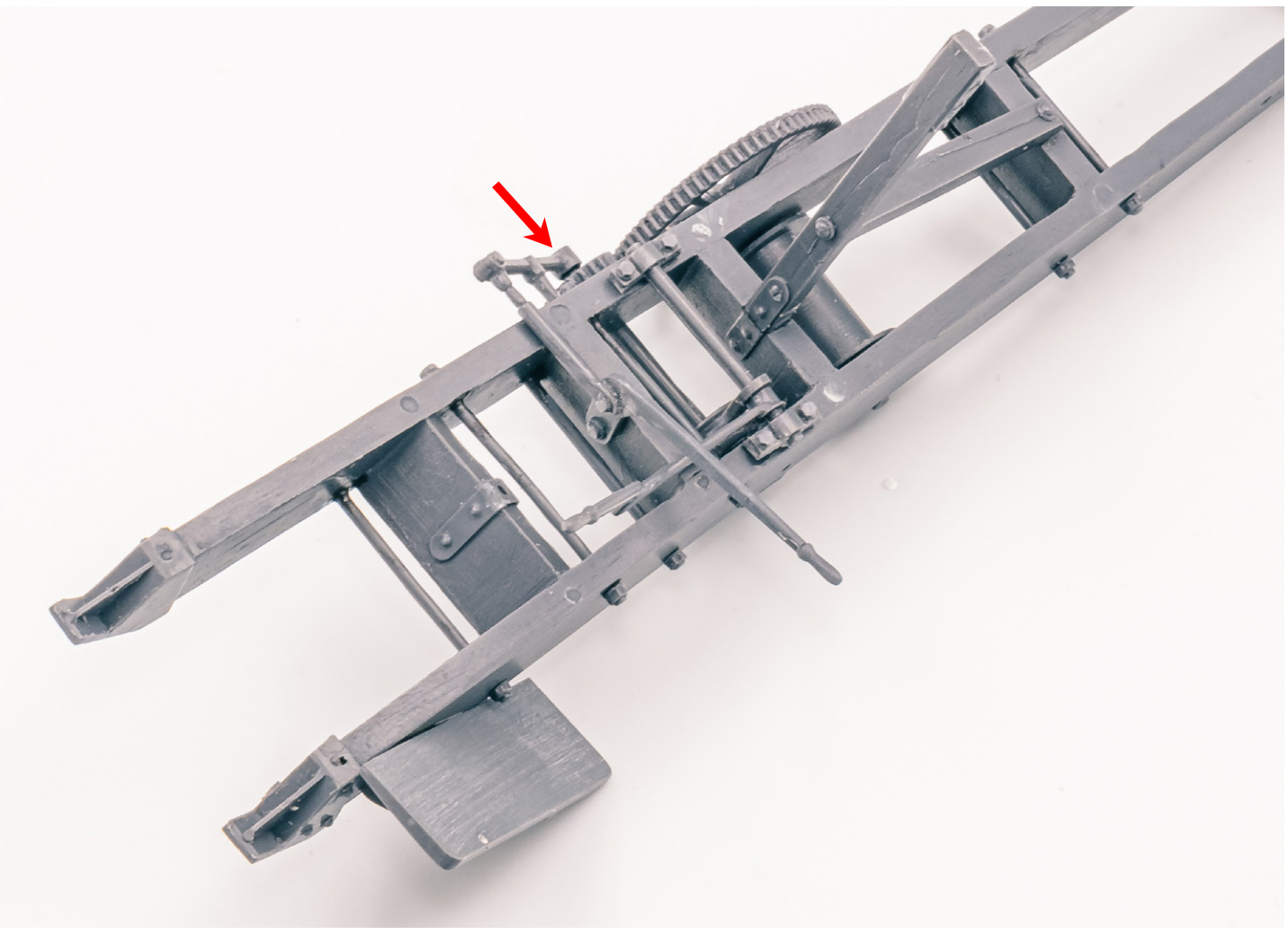

42. The small, free end of the lever assembly should line up with the stub of the shaft protruding from the overhung gear assembled in step 35.

43. Now the support frame can be attached to the baseplate slipped over the main mast and left loose in step 17. If you have chosen to rotate your main boom, you will also need to rotate your support frame. The main mast goes between the free end of the support frame.

44. The joining bracket attached in step 32 lines up with the collar around the main boom. Also note the called out divot in the support frame, this is where the long, smooth rod will be installed into the support frame in step 45.

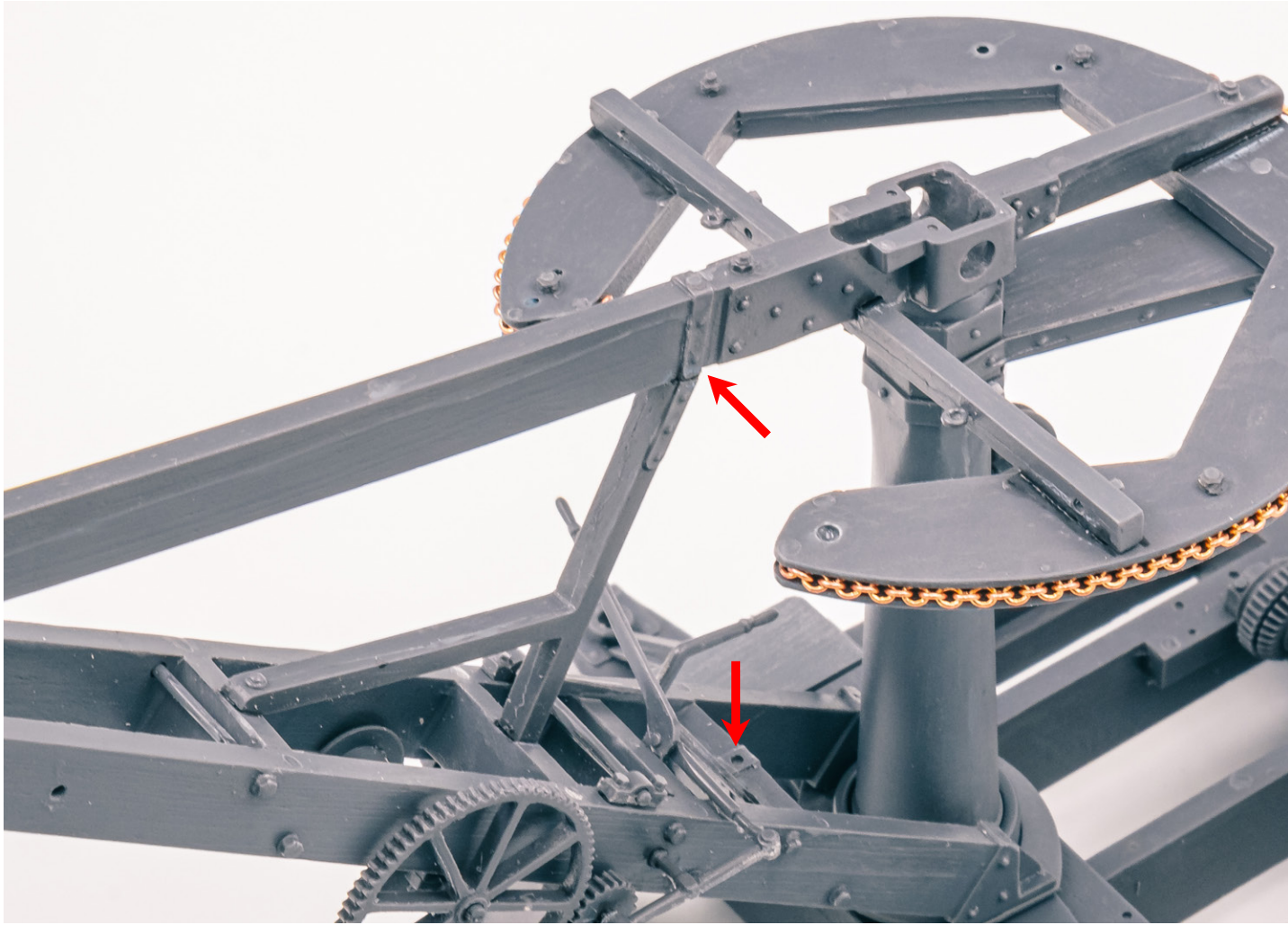

45. Install the long, smooth rod into the divot in the support frame called out in step 44, there is a corresponding divot on the underside of the main boom and the smooth rod should line up with the nut on the top of the main boom.

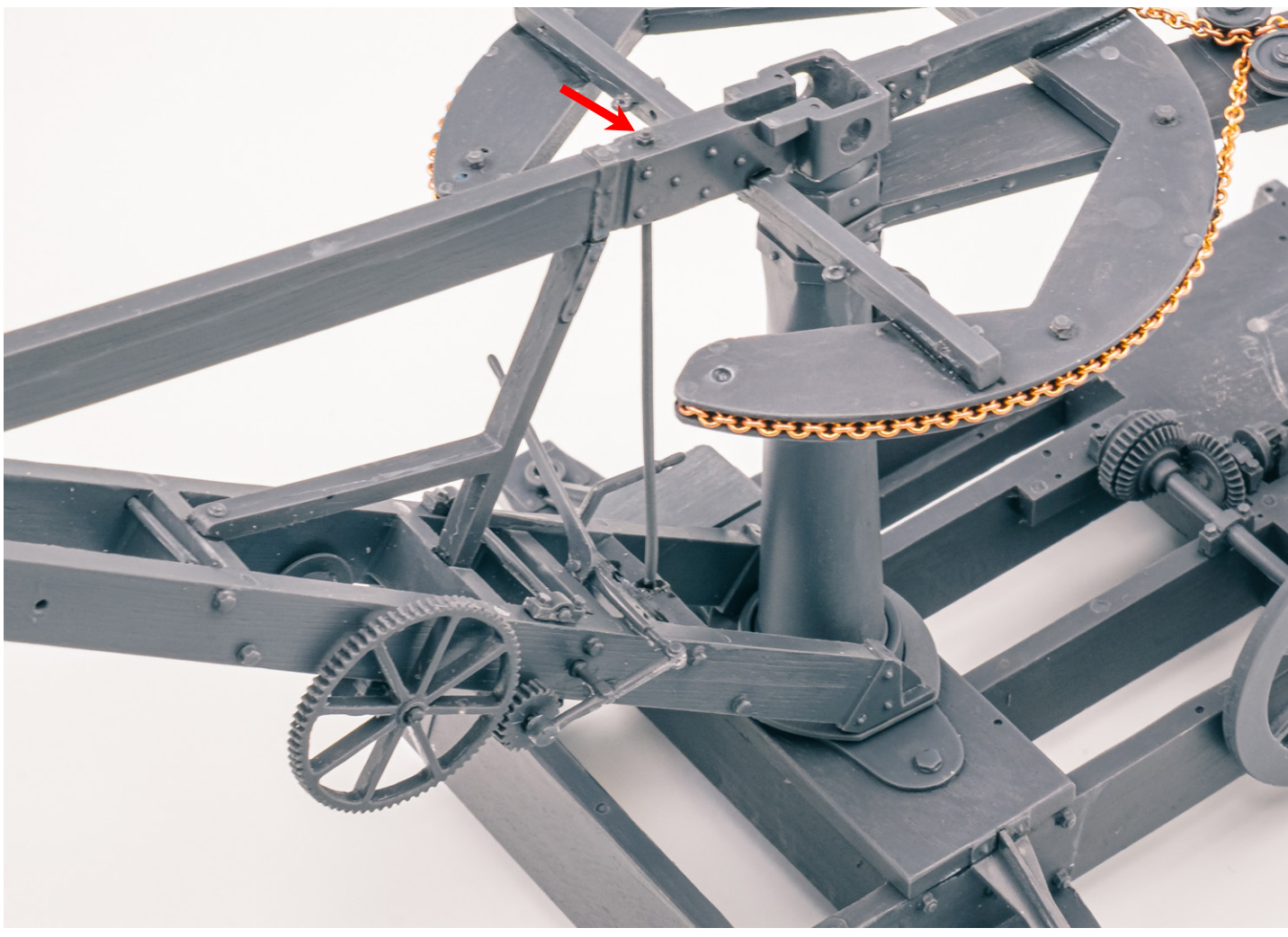

46. Now that the support frame is attached the additional supporting rods can be attached that join the support beam of the main boom and the support frame. There are locating pins on the end of these rods with corresponding divots on the outside of the support frame on either side. The smooth end of the supporting rods go into holes in the support beam.

47. Another angle of the supporting rods.

48. For the next steps, pay attention to which beveled gear you are using. There is one sleeved bevel gear which has a protrusion on the front and back of the gear, pictured on the left, and then there are two flat beveled gears, pictured on the right.

49. Using the beveled gear with the protrusion, pictured on the left in step 48, prepare the main boom/main mast chain guide using the angled journal and axle with angled journal. Use one of the three windowed chain guides for this assembly.

50. Use the locating pins on the angled journals to line up the gear/chain guide assembly on the main boom. The extra length from the axle with cast journal should face away from you when viewed from this angle.

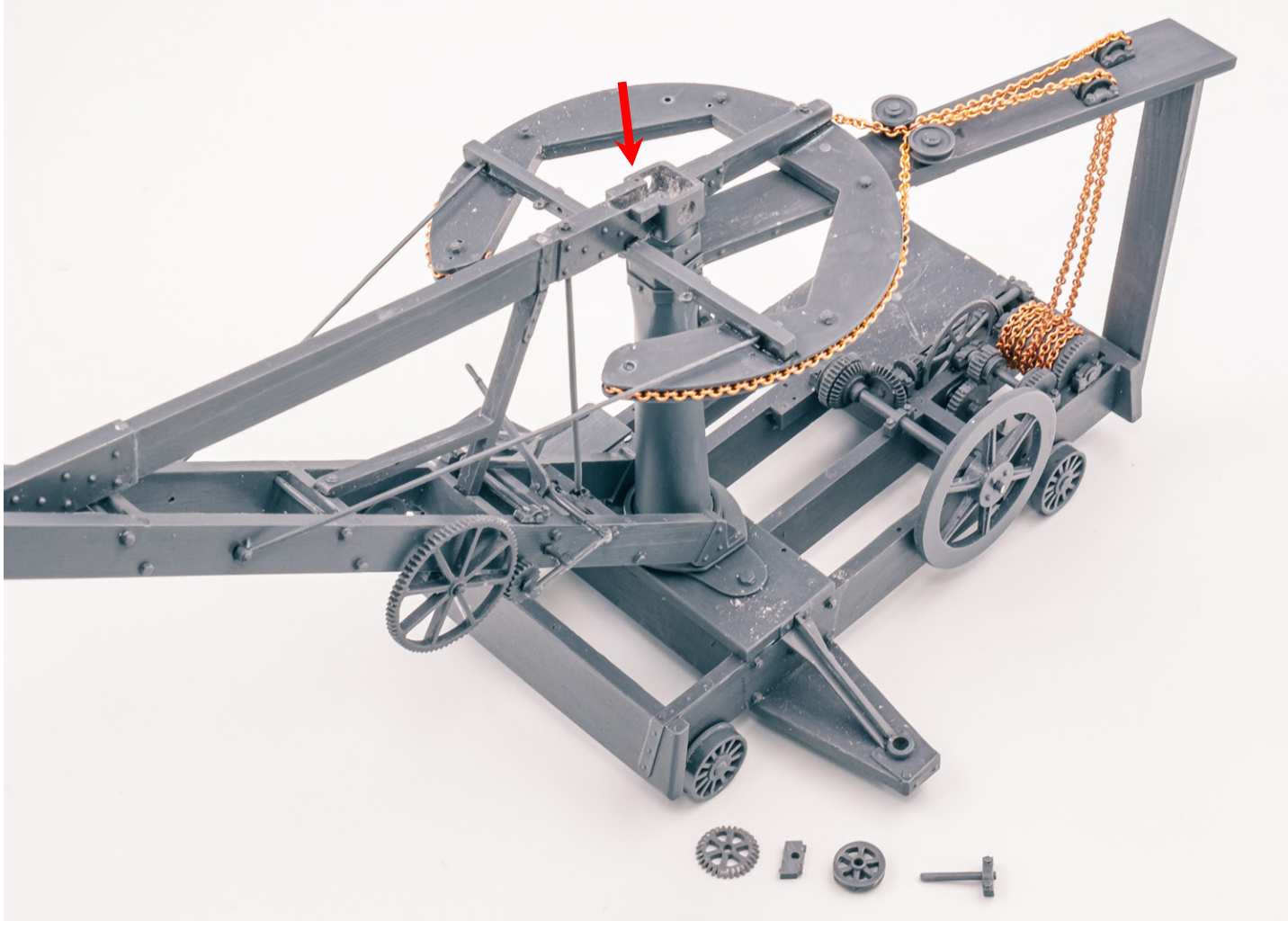

51. The gear/chain guide assembly installed on the top of the main boom. Note how the sleeved bevel gear provides the appropriate spacing between the backside of the gear and the main boom.

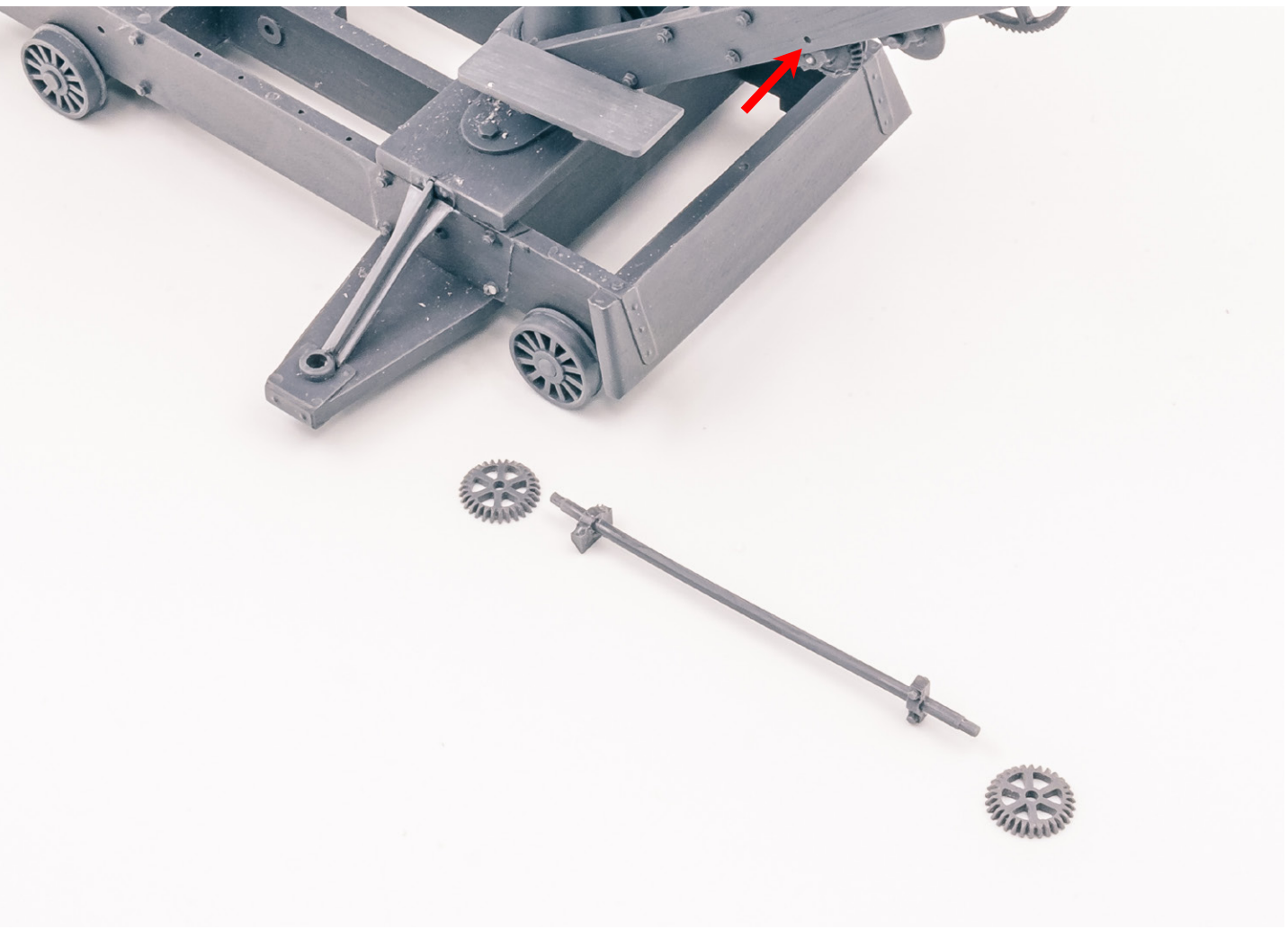

52. Using the flat bevel gears and the smooth shaft with the angled journal and the rotated journal, dry-fit the flat bevel gears on the free ends of the shaft so that they face the same direction, see step 53. There is a locating pin on the backside of the rotated journal and its corresponding divot in the support frame.

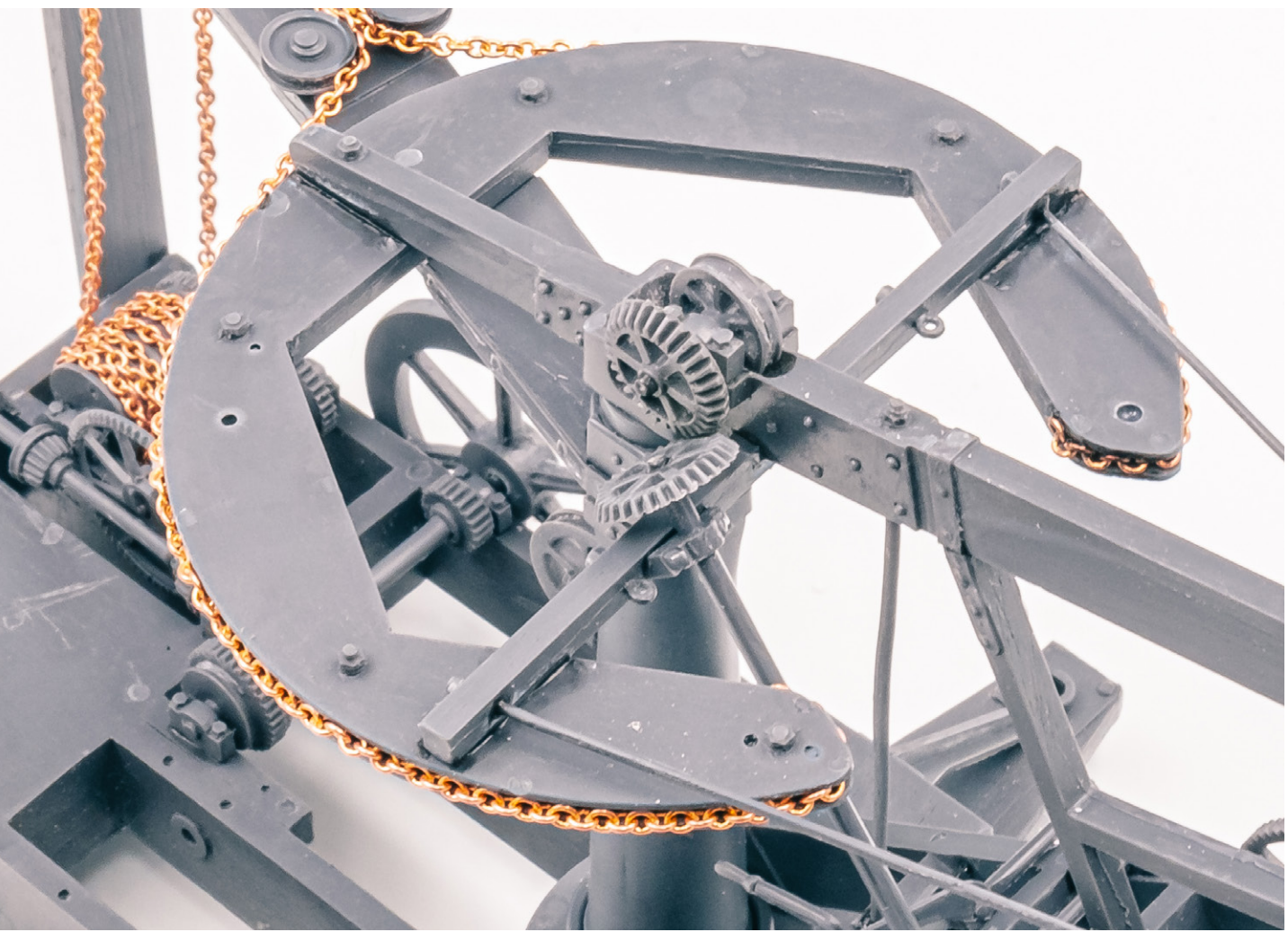

53. Here is how the beveled gears interface with each other at the top of the main boom. Once the mesh of the two beveled gears are set here, glue the beveled gears in place. Note that the angled journal is attached to the main boom support beam.

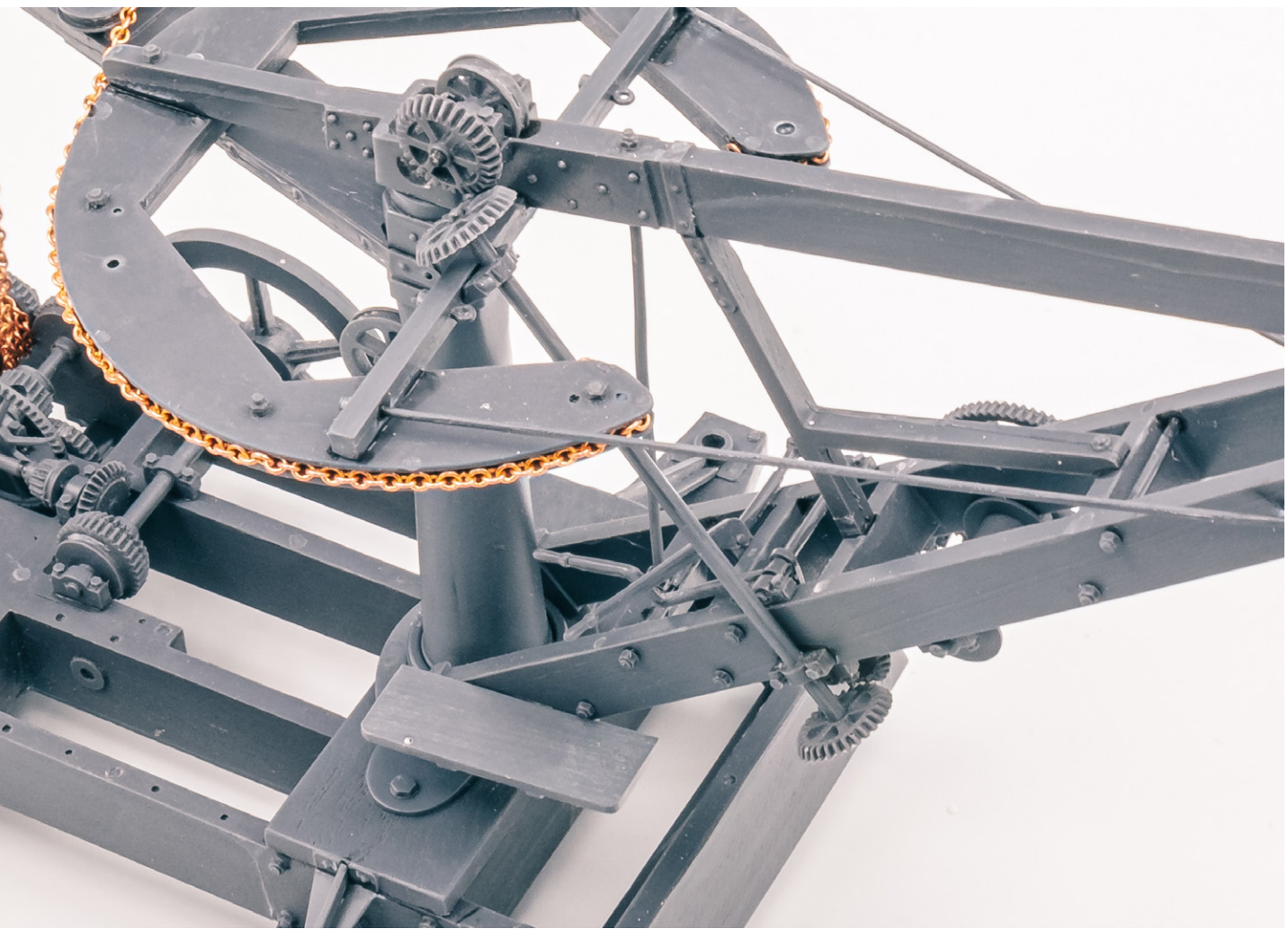

54. Another angle of the beveled gear-set.

55. Note how the lower bevel gear interfaces with the geared shaft installed in step 35. Once the meshing is set here, the beveled gear can be glued in place. Set the main body of the excavator aside at this step.

56. Glue the door to the bucket.

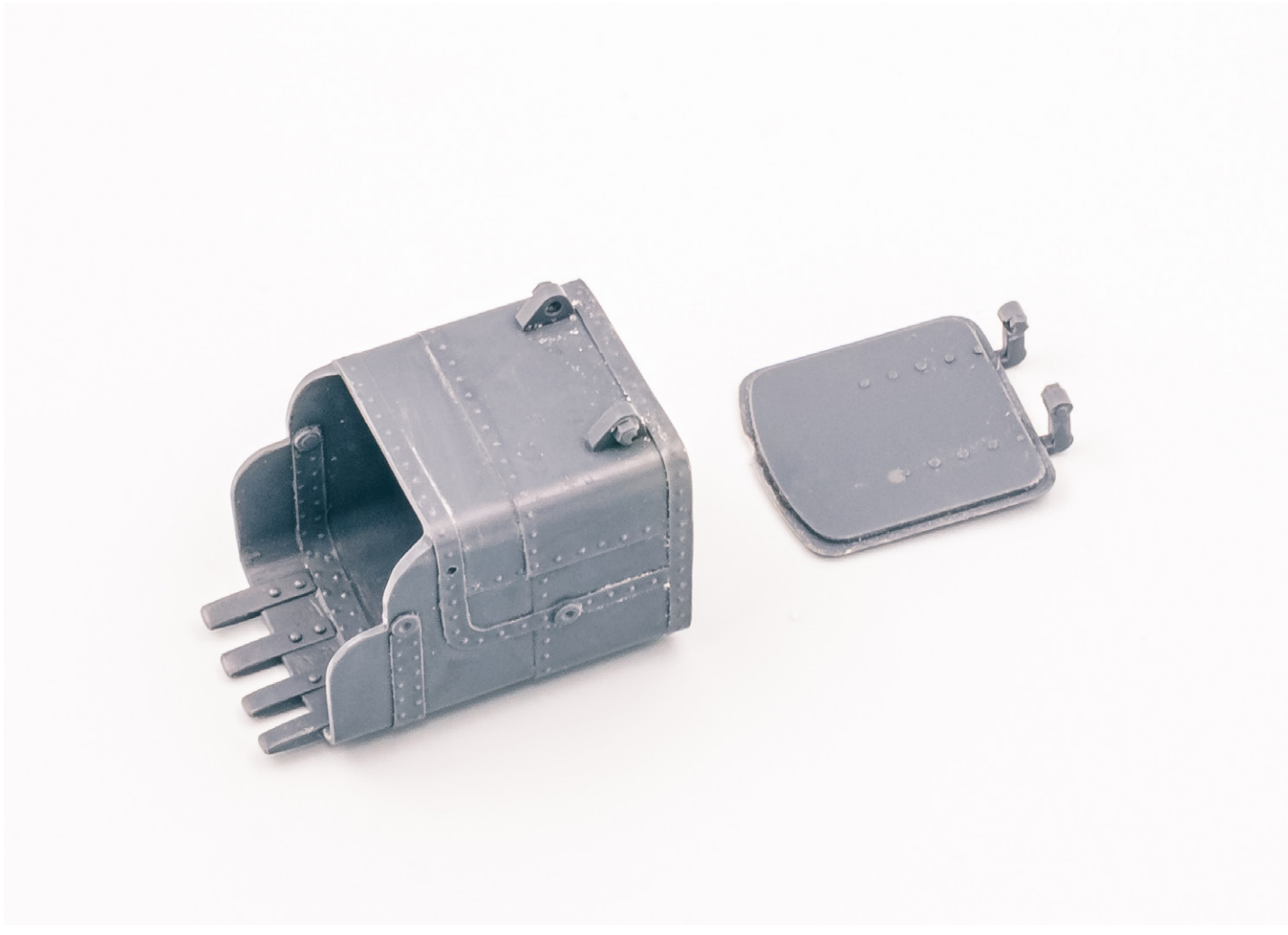

57. The door attached to the bucket.

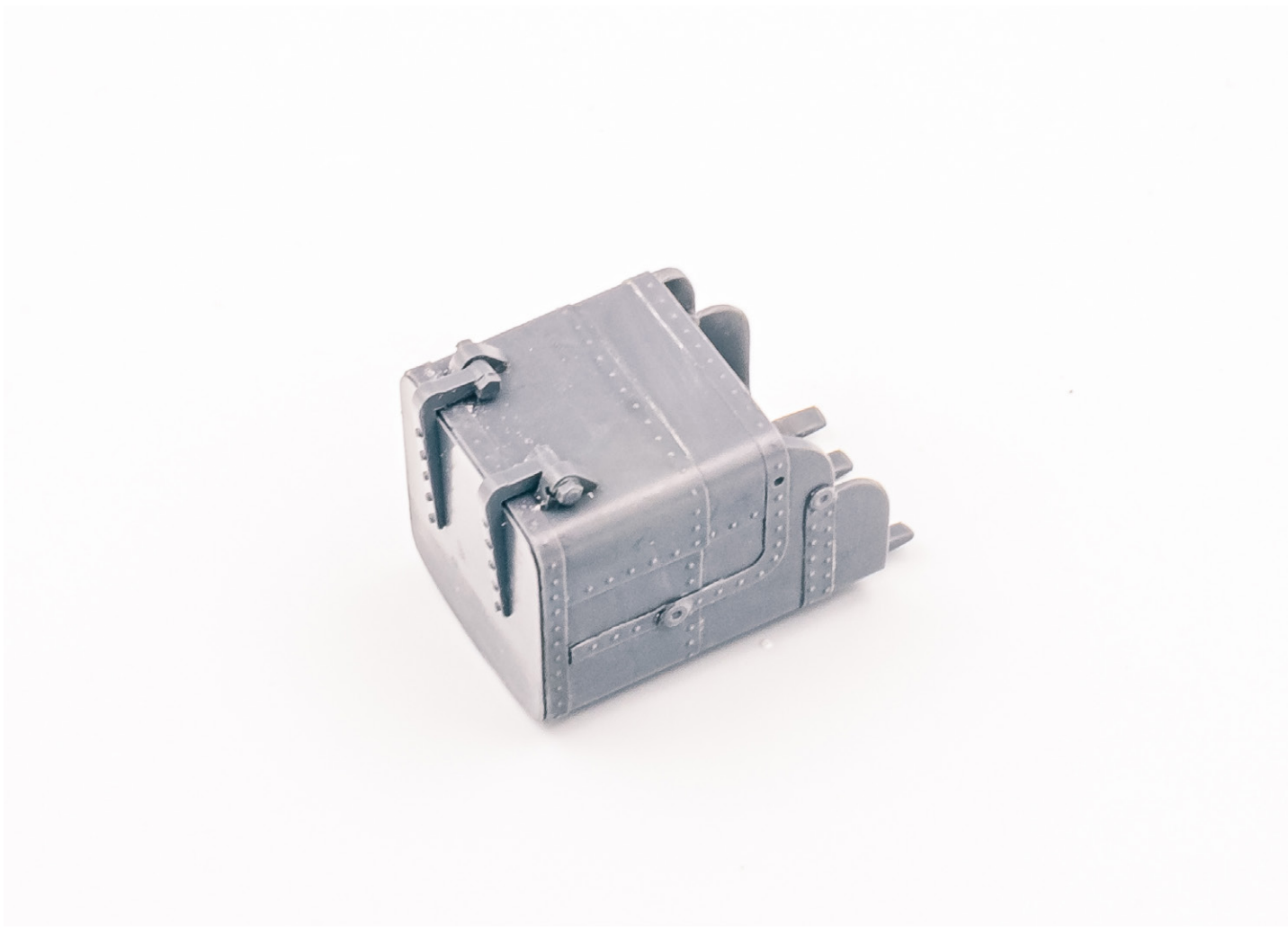

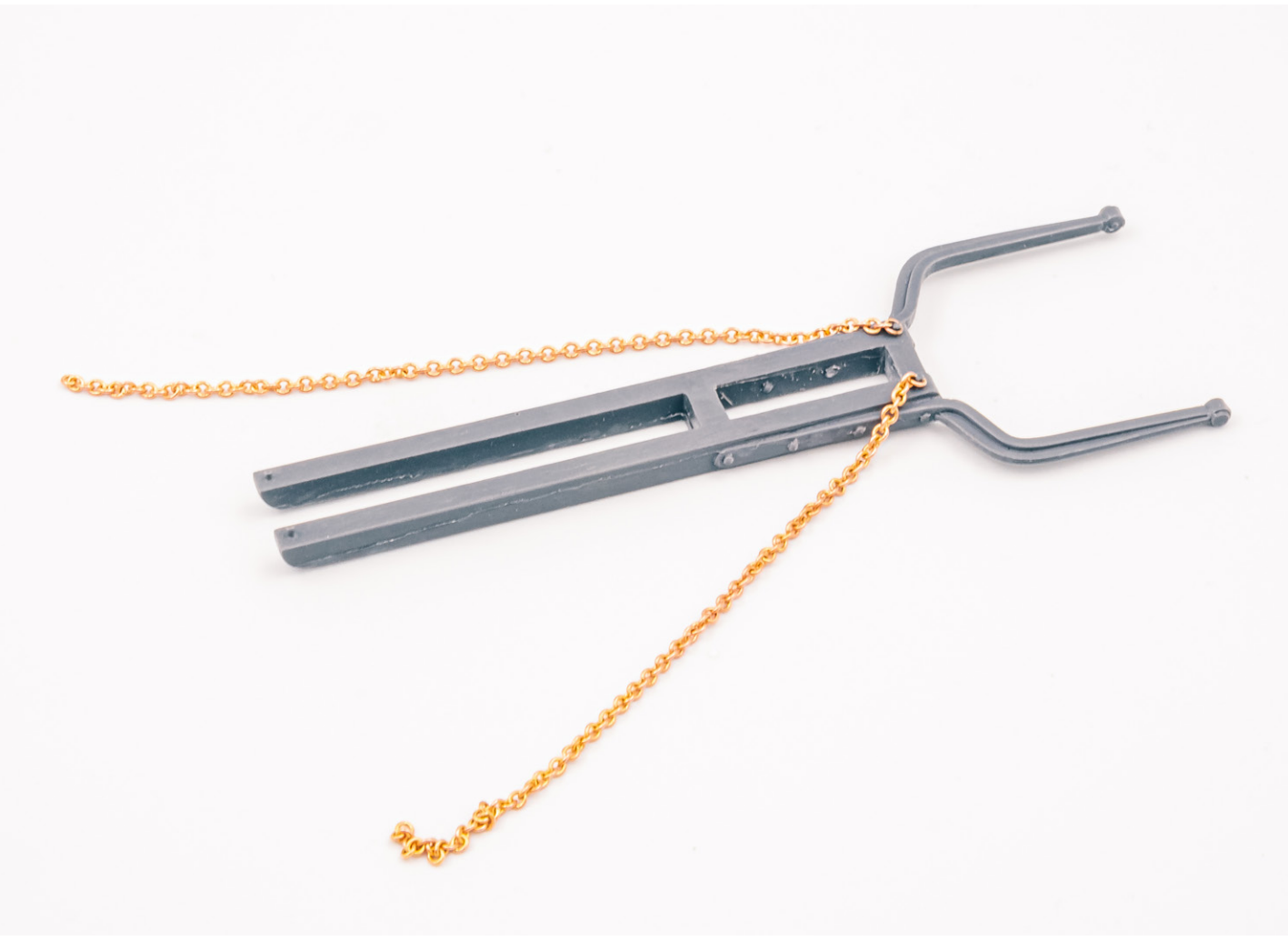

58. Cut two 4 and 1/8" minus 1 link lengths of chain for the bucket jib and secure them to the two posts on the wider side of the jib.

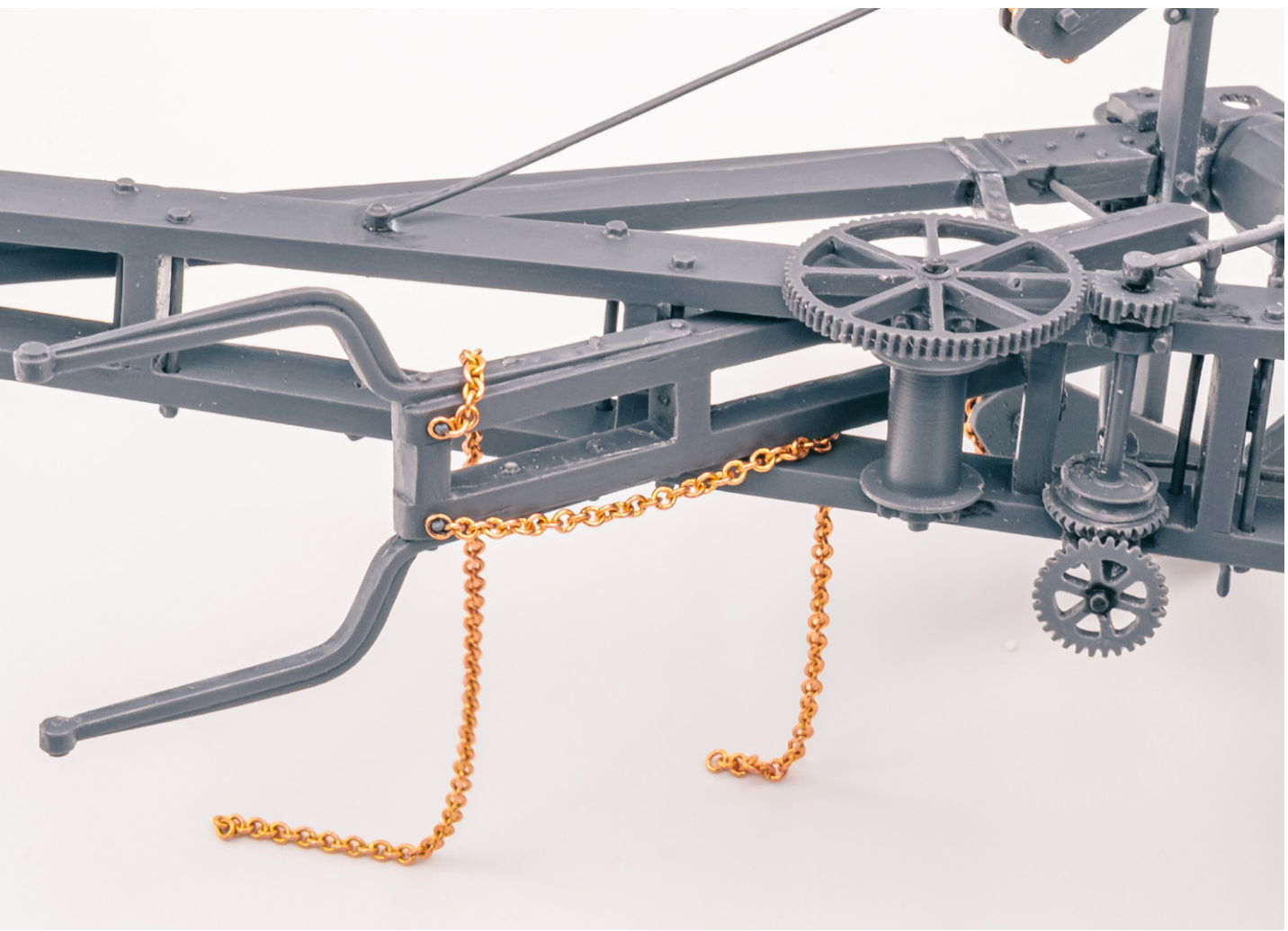

59. Feed the jib through the support frame, with each side of the jib going around the joining bracket from step 32. Feed one length of chain through the support frame as shown.

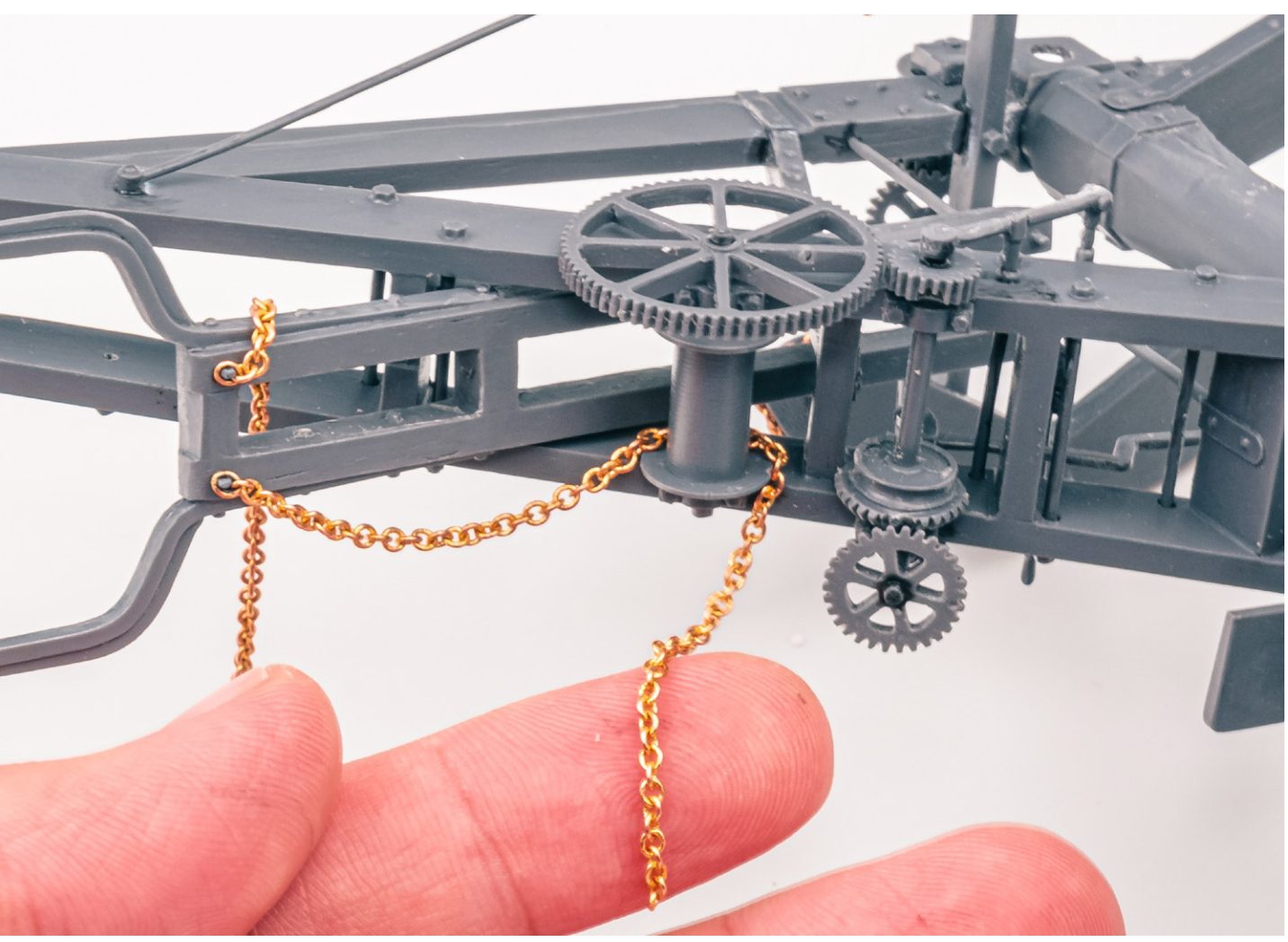

60. Wrap the chain around the back of the smooth spool.

61. Feed the chain through the support frame again and attach it to the empty pin that secures the chain to the jib. Repeat the process with the other chain for the jib, mirroring the loop of chain around the spool.

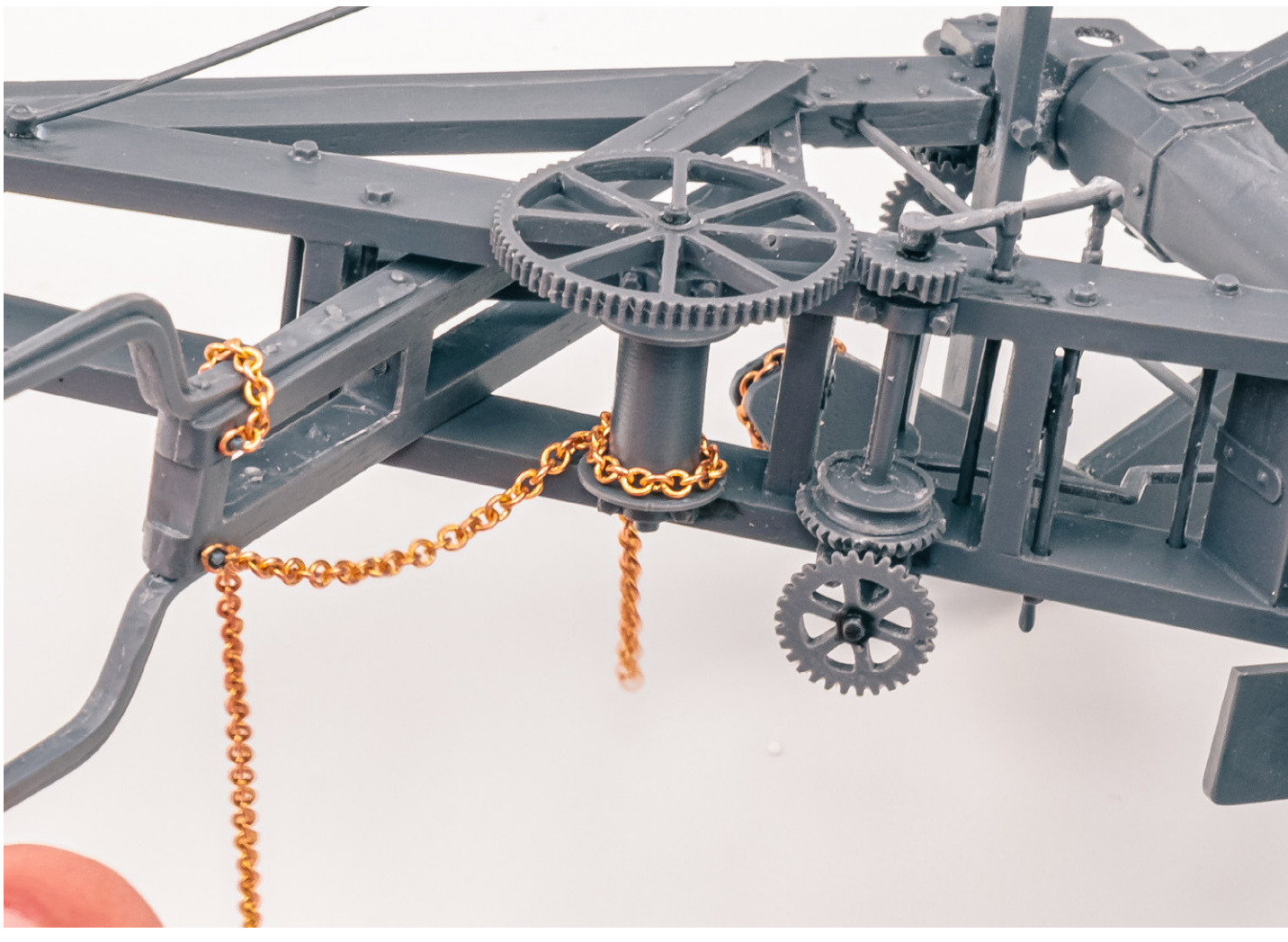

62. Another angle of the jib.

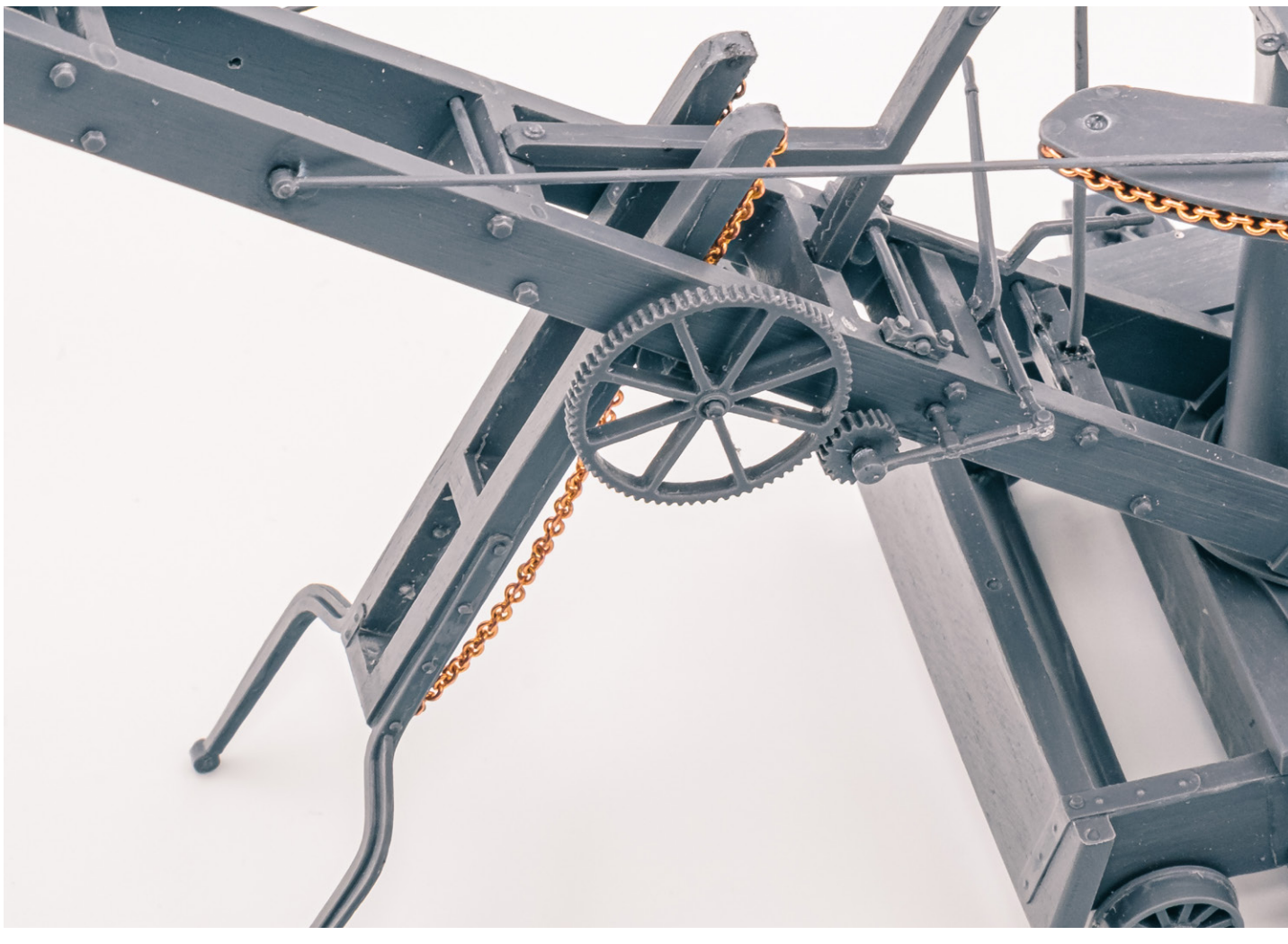

63. Here you can see how the loops of chain around the spool are towards the center, allowing the jib to slide on the spool without binding the chain.

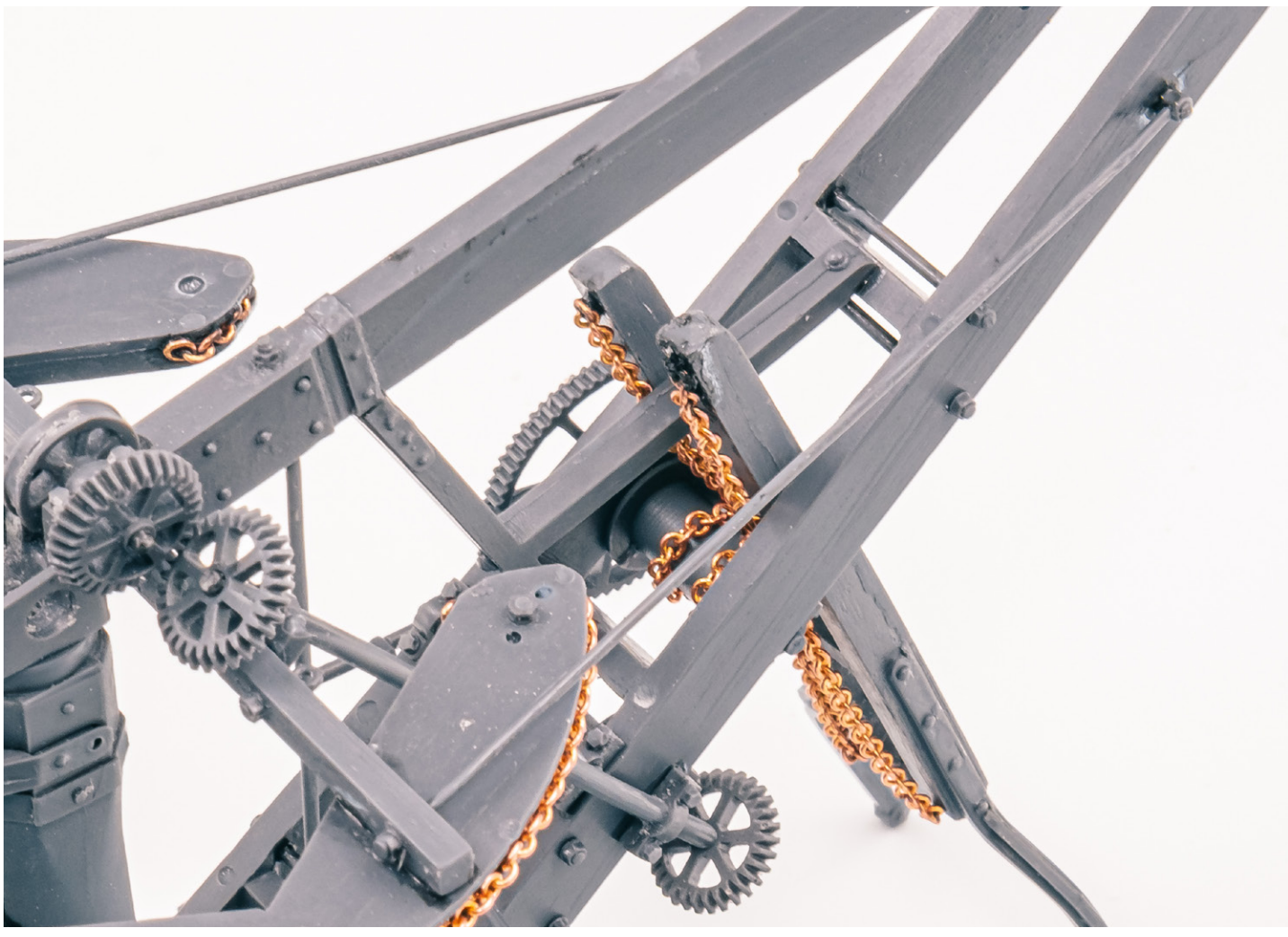

64. Assemble the bucket pulley by gluing the halves of the exterior together, leaving the center chain guide in the center free to spin.

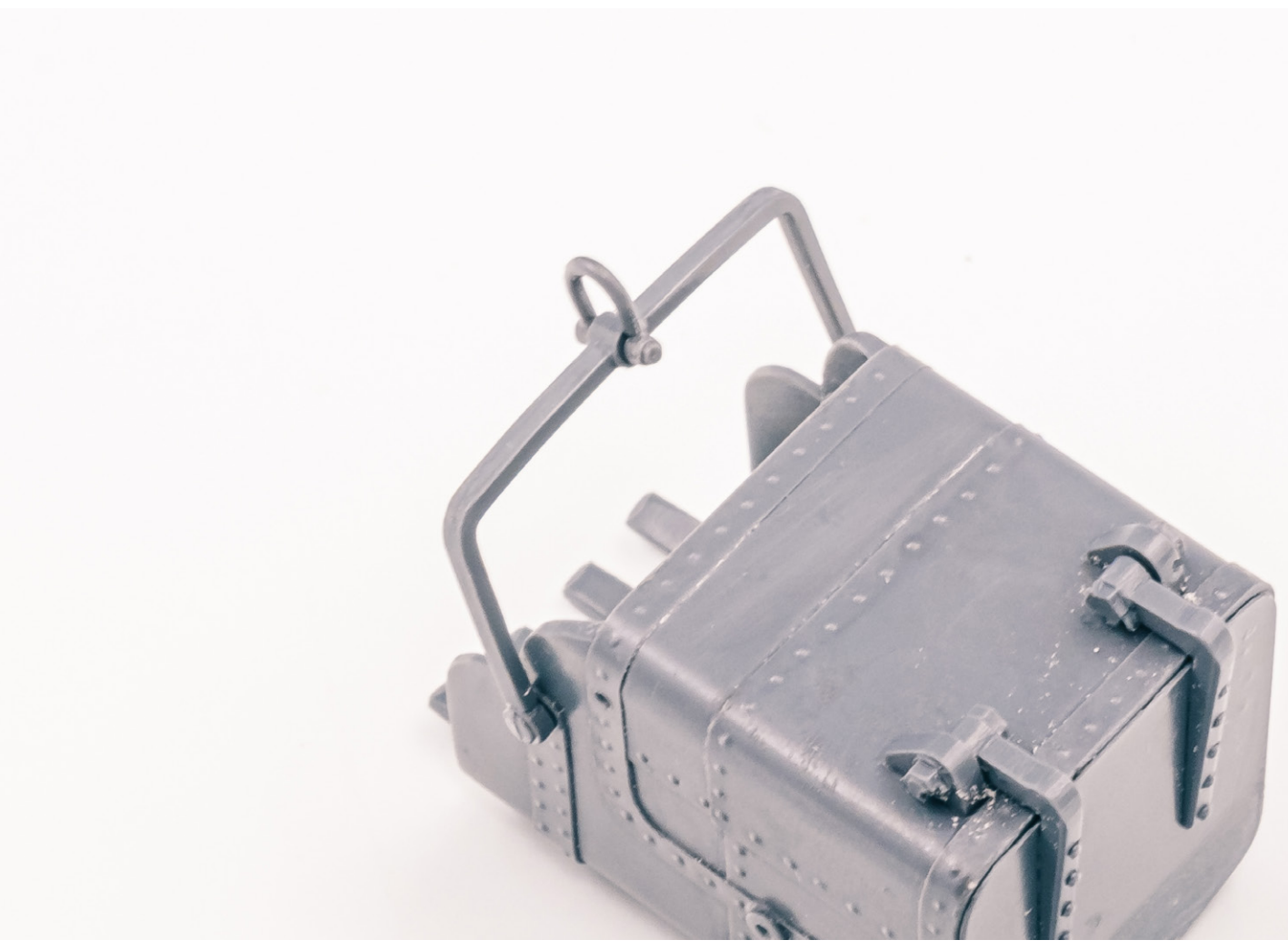

65. Dry-fit the "U" shaped bar onto the front of the bucket, using tape to hold it in place if necessary. Dry-fit the narrow shackle into place on the "U" shaped bar, again using tape to hold it in place if necessary.

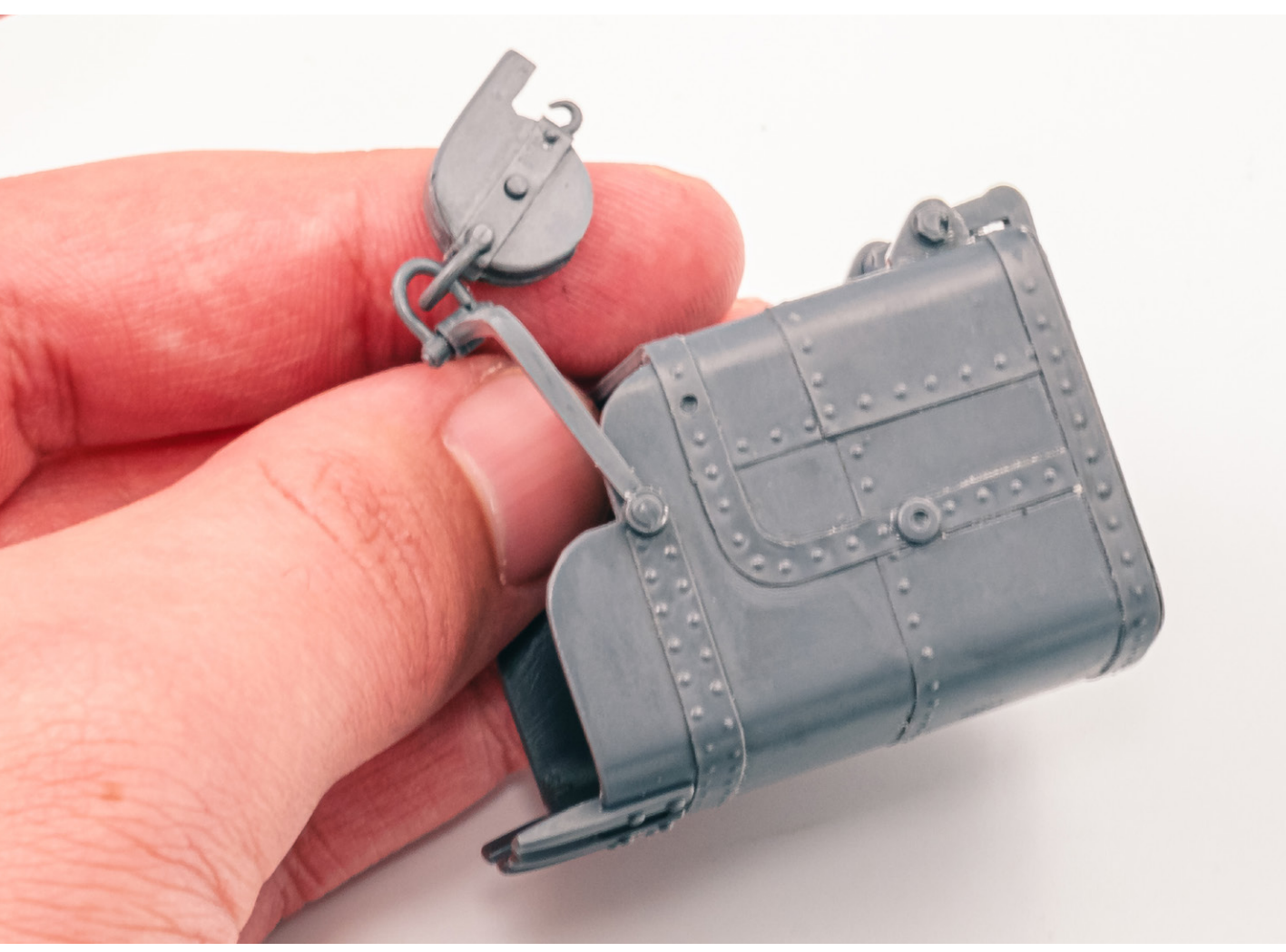

66. Dry-fit the wider shackle in place through the narrow shackle on the "U" shaped bar and around the bucket pulley. Again, use tape to hold it in place if necessary.

67. For the bucket in the lowest position, cut 29 and 3/4" minus 1 link of chain and feed some of it through the hole in the main boom, through the hole you cleared earlier in the main mast. It should come out through the recessed area in the main mast, behind the larger chain guide. If you would like the bucket to be higher, you can cut a shorter length of chain, but I would recommend making any adjustments later as it's simple enough to do and you don't want to cut too much off. This length of chain will wrap the spool completely and have the bucket in a low position, so that in operation if the bucket needed to reach lower into a ditch, there would be enough chain to permit doing so.

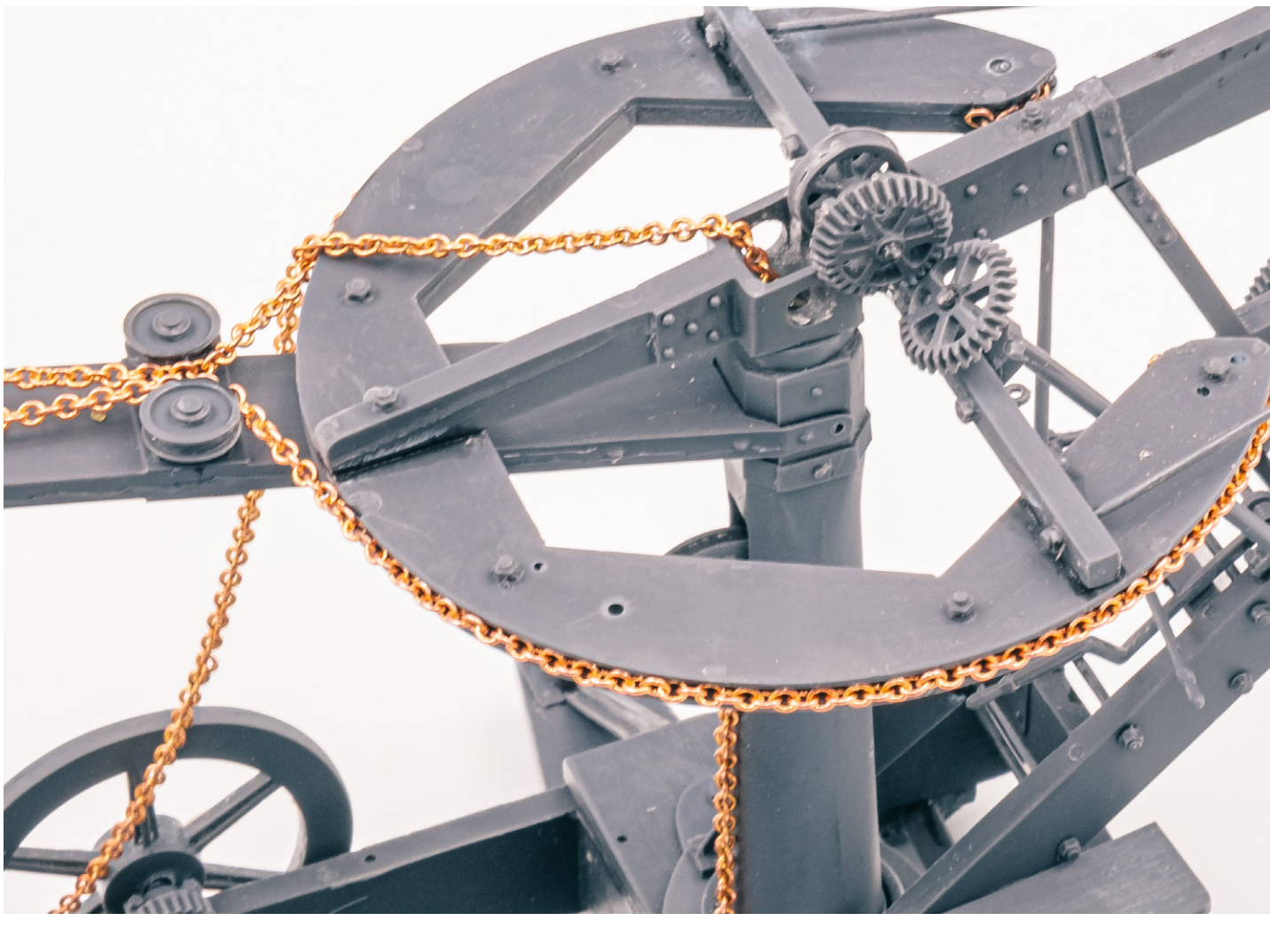

68. Glue the free end of the chain that has passed through the main mast to the post on the larger, geared shaft and wrap the chain around the spool.

69. Before gluing the shaft and spool in place, slide the remaining large gear onto the shaft, meshing it with the smaller gear on the shaft that is connected to the flywheel, and then fit the appropriately sized journal over the free end of the shaft. If you would like to position the bucket lower than the main frame of the excavator, unwrap some of the chain from the spool before gluing the spool in place.

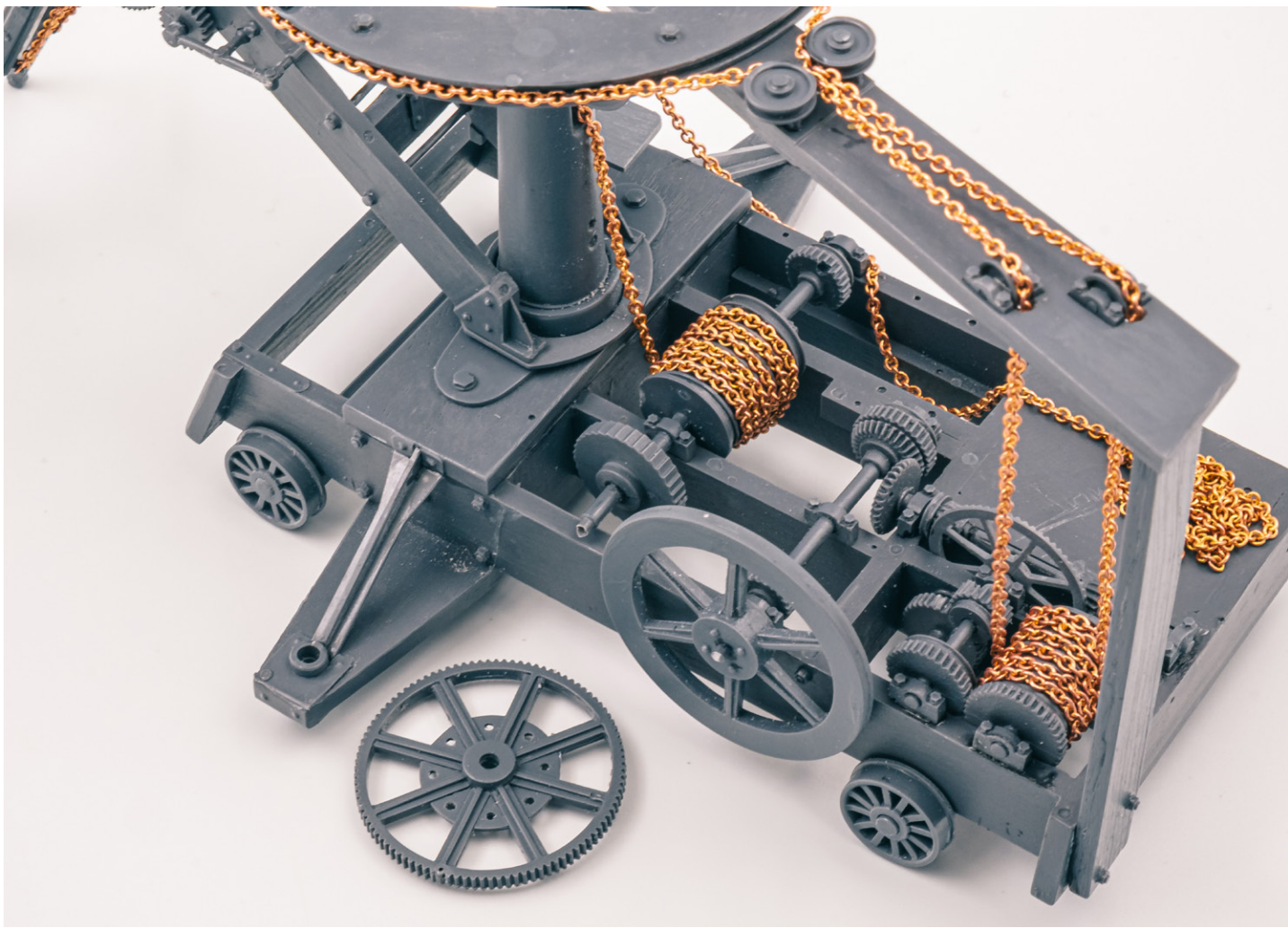

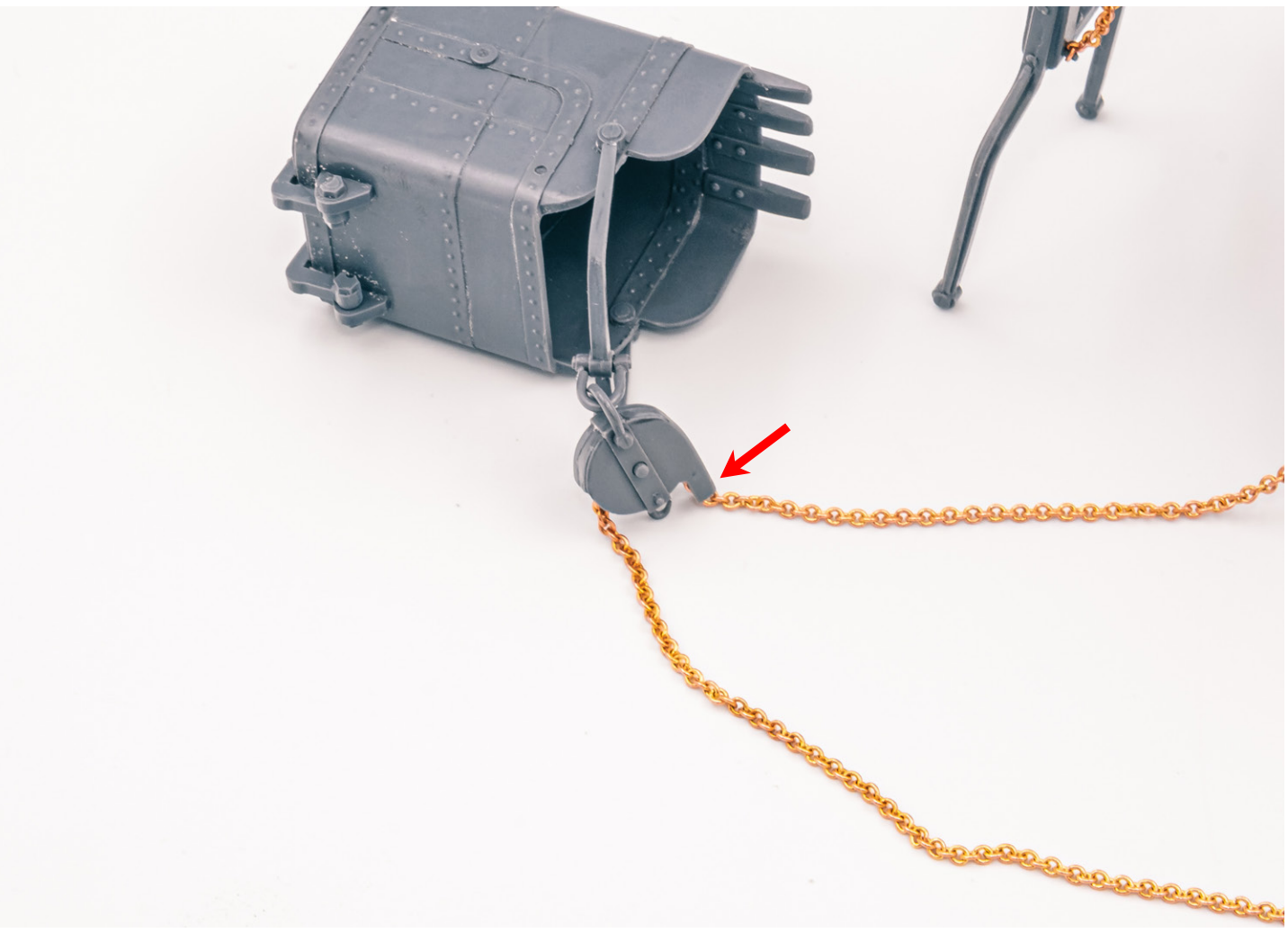

70. Feed the chain through the pulley on the bucket, first through the covered side, pointed out in the photo, and then out through the open side of the pulley.

71. Assemble the remaining chain guides by using the mid-length axle, three journals, and two of the windowed chain guides. These chain guides should match the one already installed on the main boom. The chain guides fit in the space between the main boom and the support frame. Install the two hex head bolts through the holes in the support frame that will pin the main boom to the support arm. Slip the chain over the tops of the chain guide towards the bottom of the main boom and the chain guide closer to you when viewed from this side.

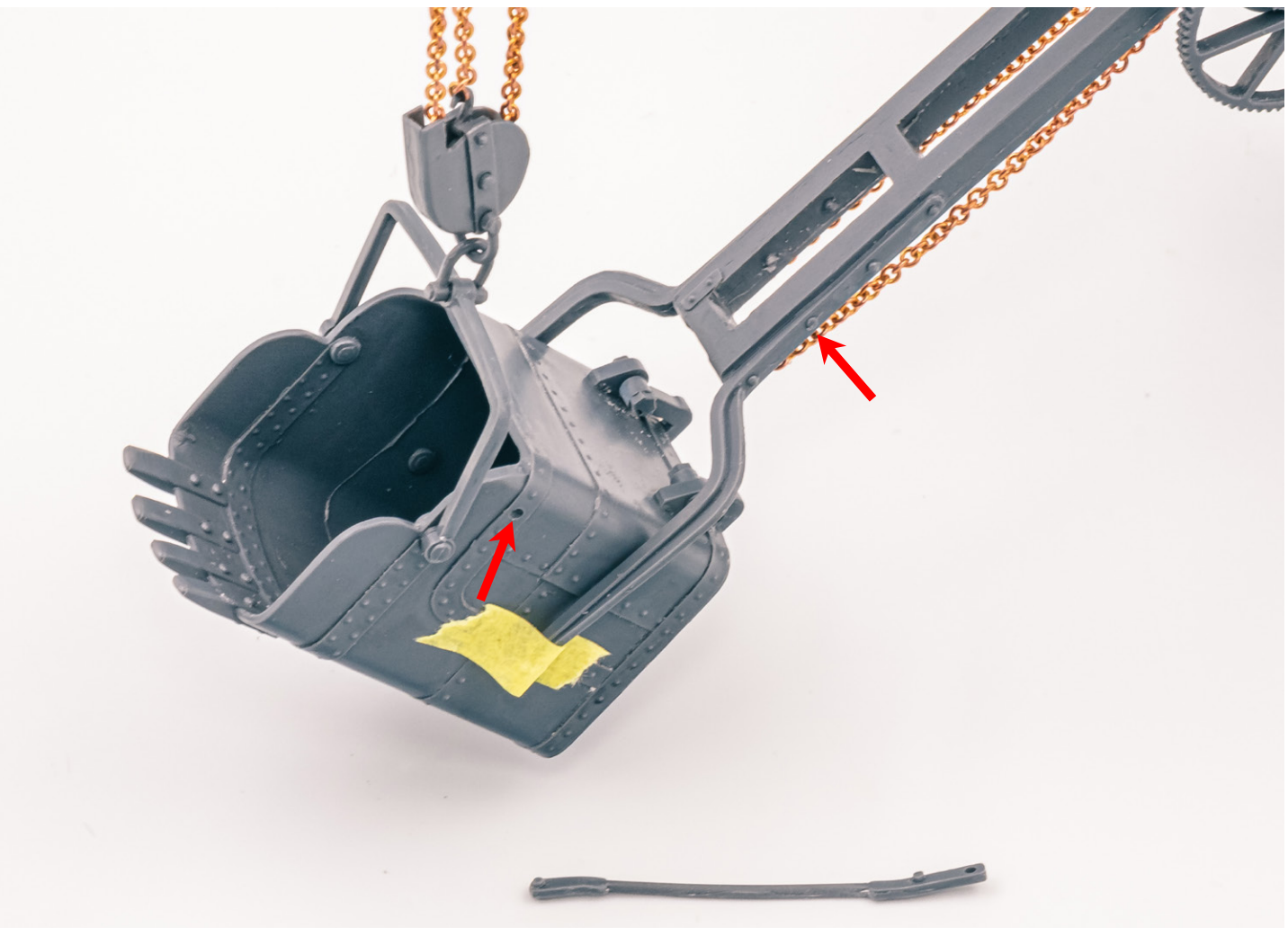

72. Loop the remaining chain over the remaining chain guide and hook it on the end of the pulley, see step 74 for another angle. Before gluing the "U" shaped frame and shackles in place, dry-fit the bucket to the jib and glue the bucket supporting rods in place to fix the angle of the jib and bucket in place. There is a locating pin on the shorter end of the supporting rods that locates into the divot on the bucket. The longer end of the supporting rods have a divot with lines up with a locating pin on the jib.

73. With both supporting rods in place, the angle between the jib and the bucket is now fixed at the correct angle.

74. Now you can adjust the height and pitch of the bucket by controlling the length of chain that is looped through and hooked onto the pulley and sliding the jib in or out. If the jib is not staying in place where you would like it, glue the frame of the jib to the spool.

75. Once you have your height set how you would like it, glue the "U" shaped frame in place so it is perpendicular to the ground and glue the shackle on the pulley so that it is also perpendicular to the ground.

76. With the bucket installed, the lever and rods for dumping the bucket can be installed onto the jib. The base of the lever and the pivot point should line up with the small plates on the jib.

77. The lever and rod for controlling the dumping of the bucket installed.

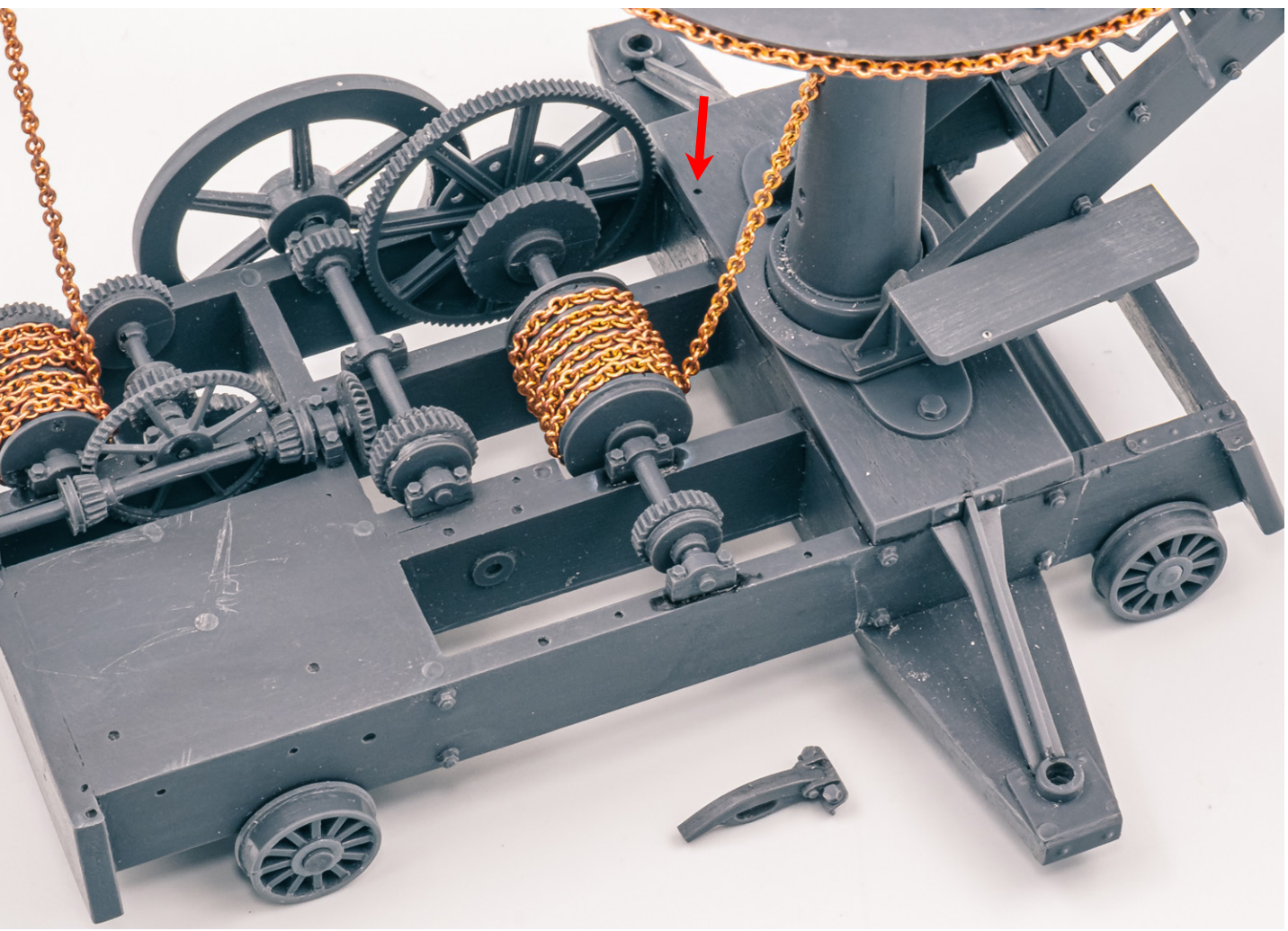

78. Now the gear-train can be finished. Install the ratchet locking pawl using the locating pin on the base of the pawl and the corresponding divot located on the mast baseplate.

79. The ratchet pawl in place. Note the open space in the pawl where the operating rod "snout" will interface with the pawl.

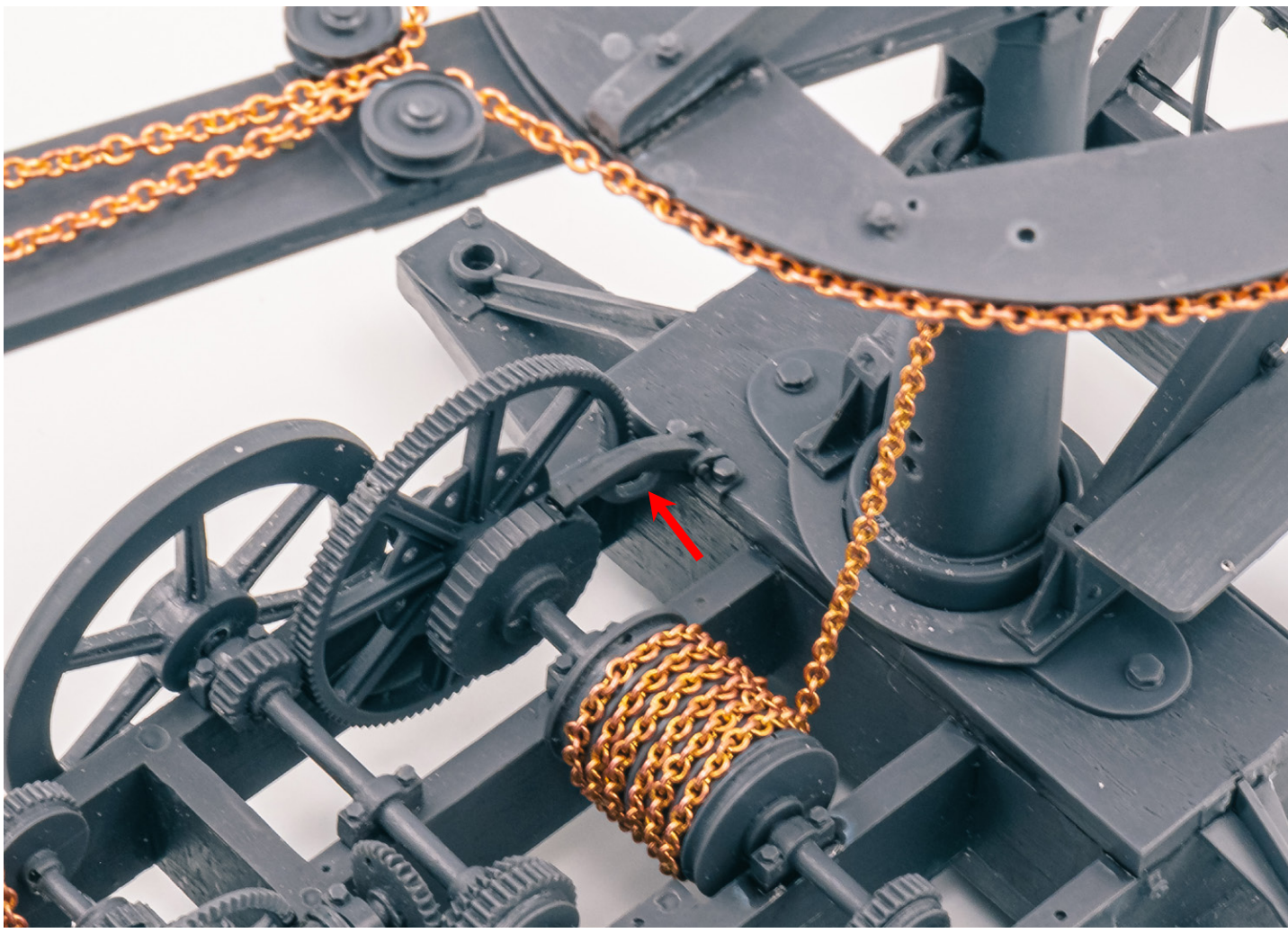

80. The operating rod for the ratchet pawl can be installed with the "snout" interfacing into the ratchet pawl. Use the locating pins on the journals to line up the shaft with the base frame

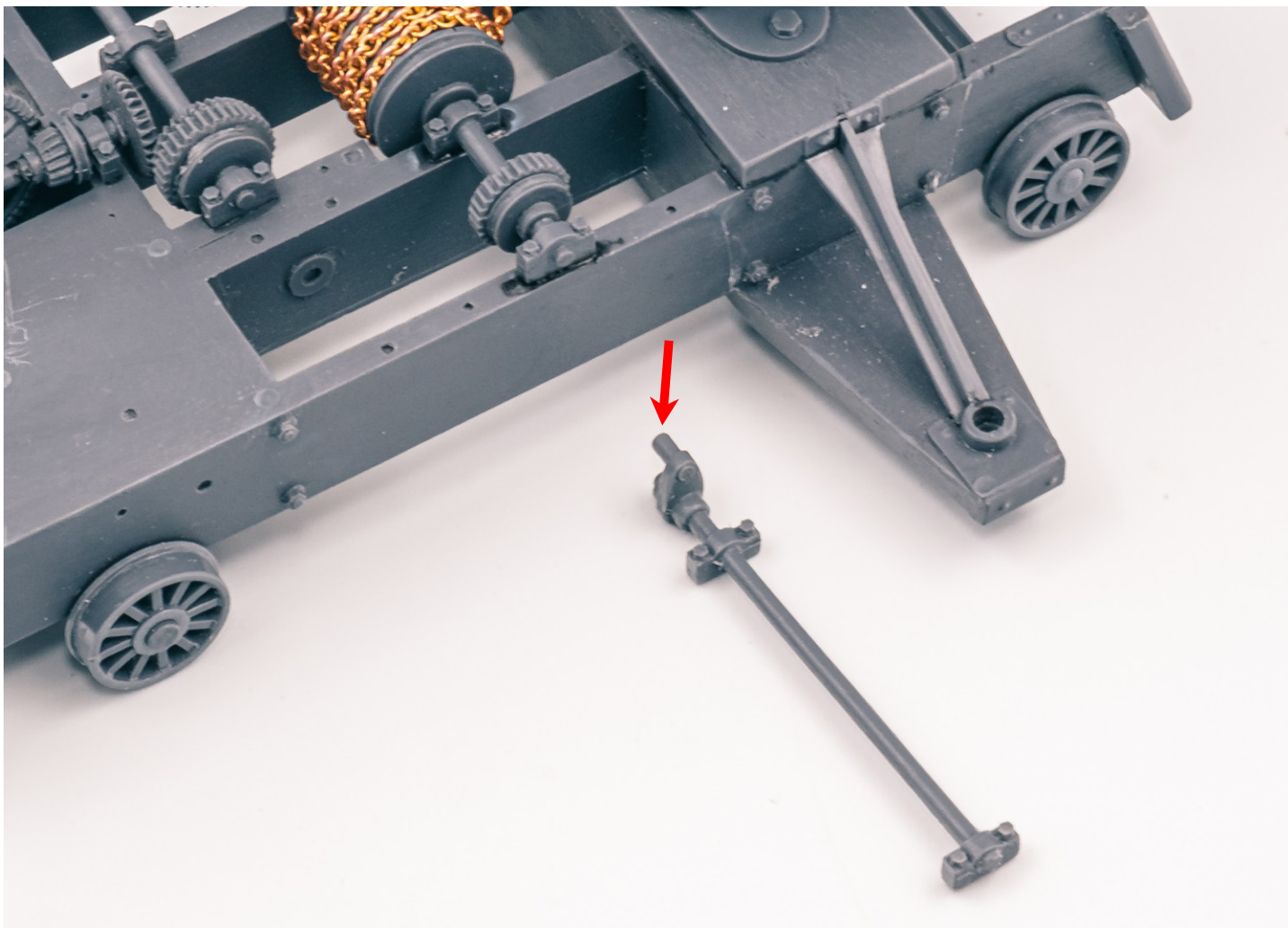

81. Prepare the main drive gear that runs the entire gear-train with the small, windowed, sleeved gear that is flat on one side. Use the appropriate sized journal to fix the free end of the shaft onto the base frame. Leave the gear free on the shaft to ensure proper meshing of the gear to the gear on the chain spool that controls the height of the bucket.

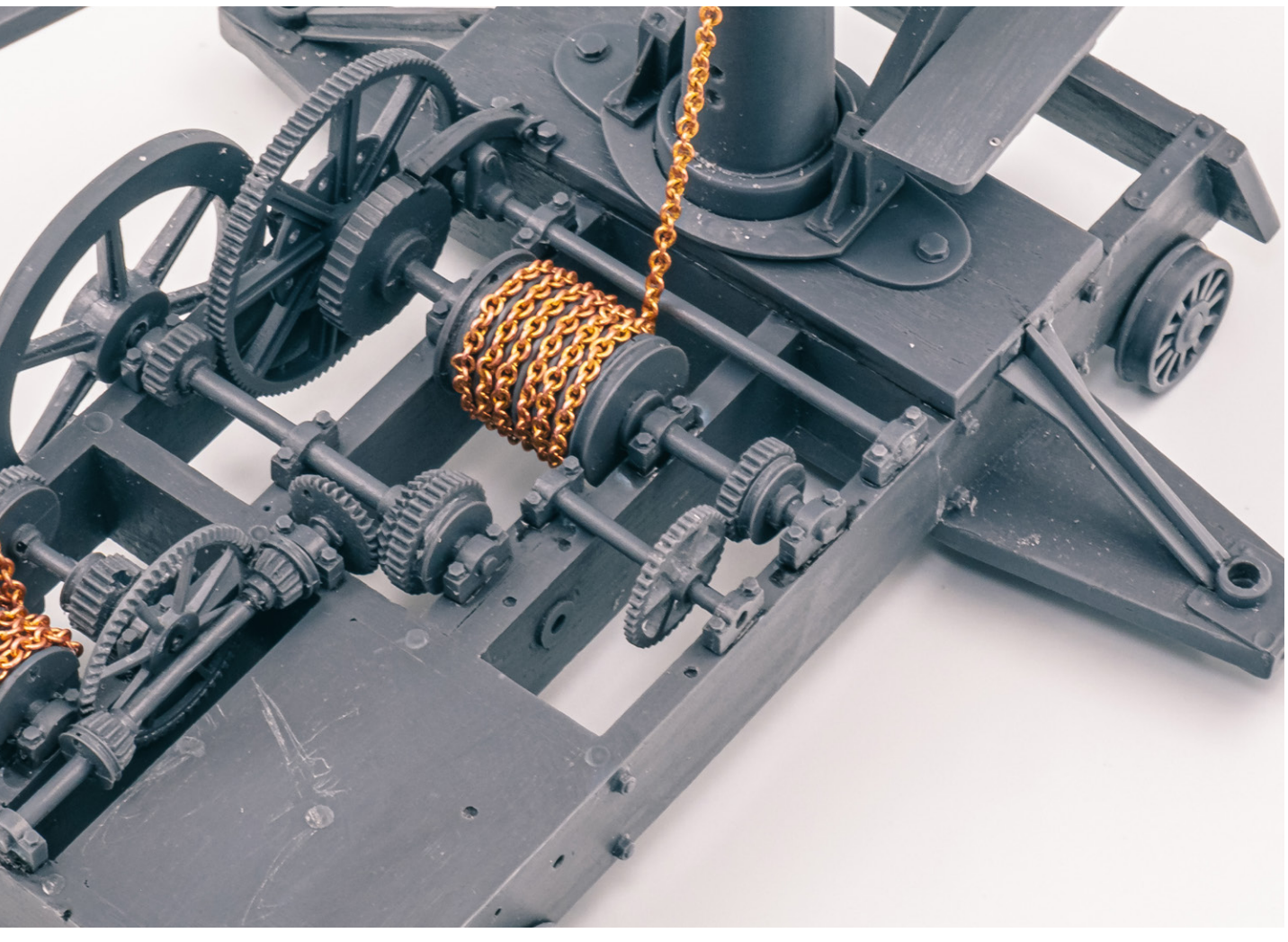

82. The operating rod for the ratchet pawl and the main drive gear installed.

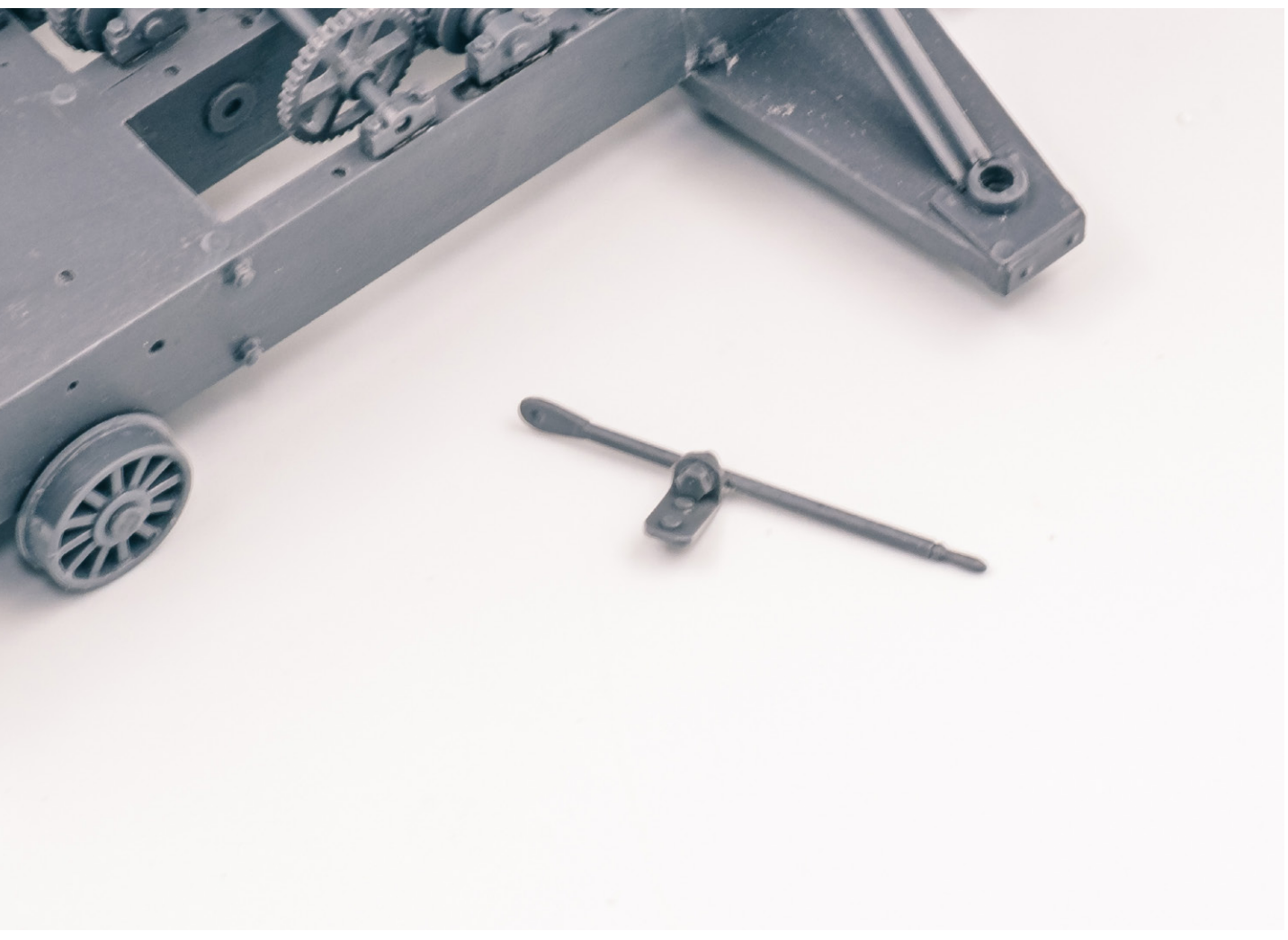

83. There are two locating pins on the bracket for the "remote" operation lever. This will line up with the platform on the supporting frame so that the operator standing there could use this lever. There are two divots on the main mast where the locating pins on the bracket for the "remote" operation lever line up. See step 85 or 87 for the installed piece.

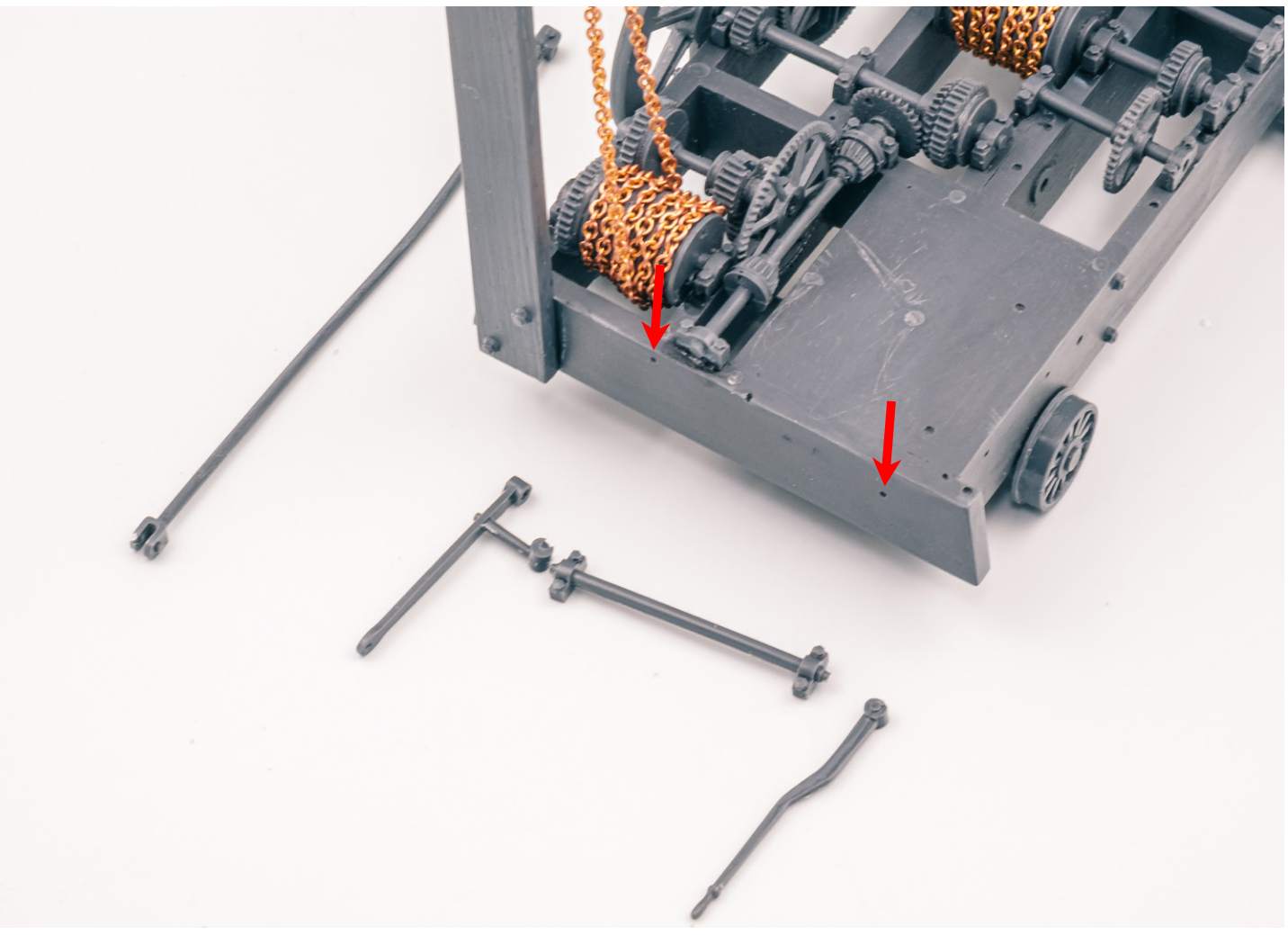

84. Line up the locating pins on the journals of the smooth shaft with the divots on the back of the base frame before installing the other parts of this assembly. The small nub on the end of the shaft should face towards the right when viewing the base frame from the back. Then install the "L" shaped lever with the cylinder at the end of the longer section lining up with the free end of the smooth shaft. The flat end of the shaft should be facing up. See step 86 for a closeup. Install the operating lever with a bend on the nub of the smooth shaft, on the right side of the smooth shaft. The cylinder on the short part of the "L" shaped lever lines up with the beveled gear shaft installed back in step 13.

85. Install the long linkage rod with opposed "C" shaped flats on the flat of the "remote" operation lever and the flat of the "L" shaped lever.

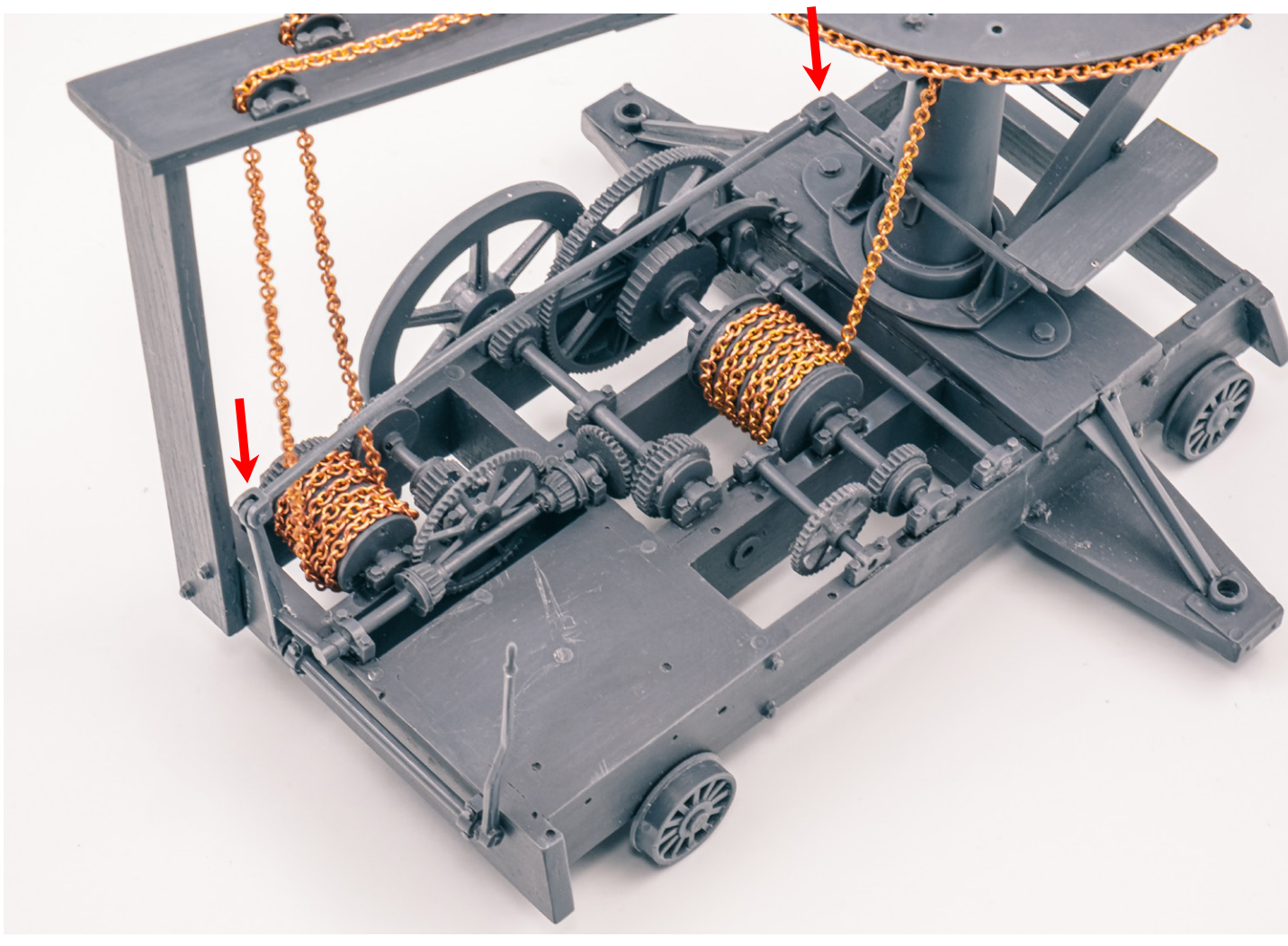

86. A closeup of the installation of the "L" shaped lever.

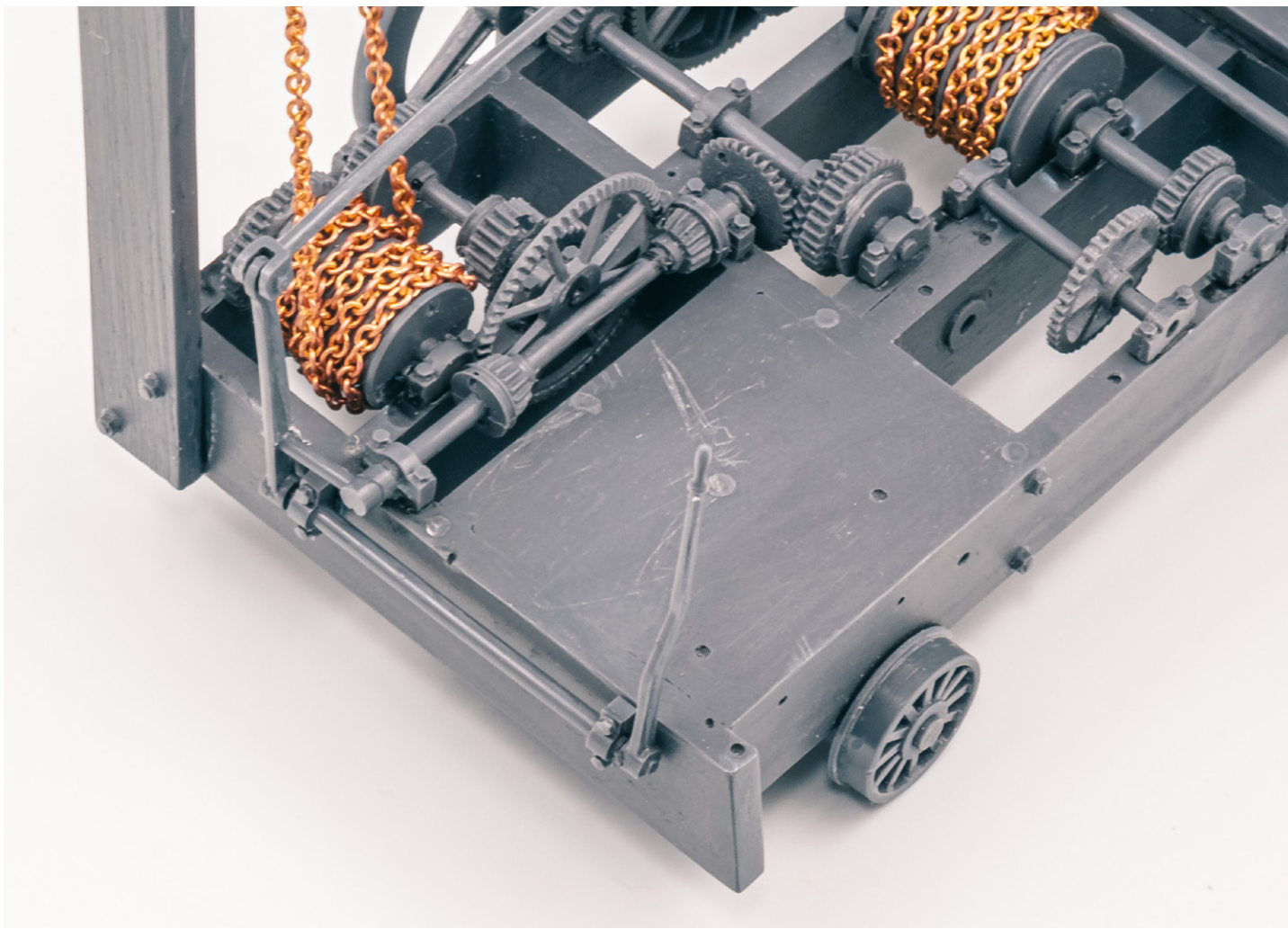

87. A closeup of the "remote" operating lever and the "C" shaped linkage rod attachment.

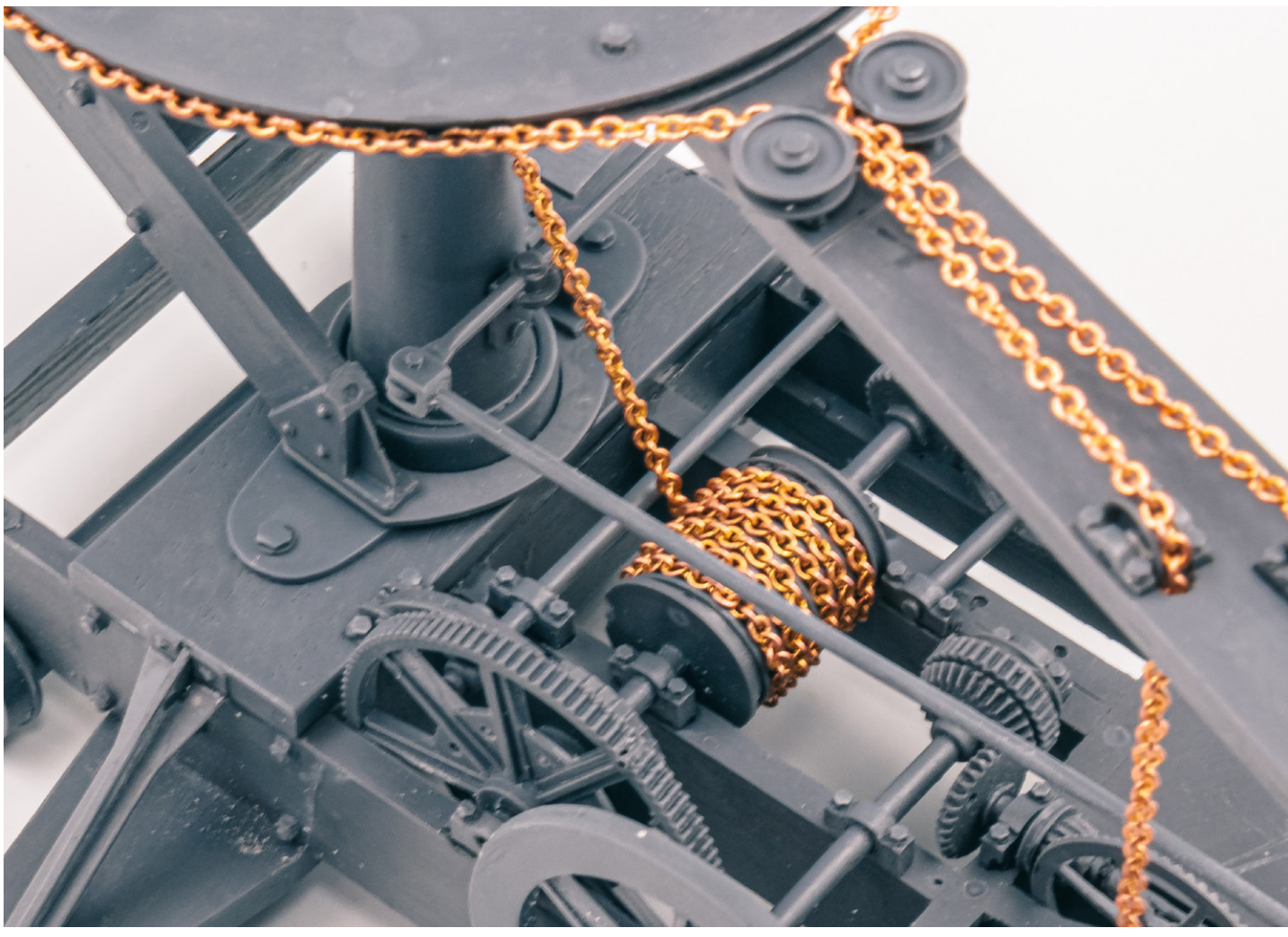

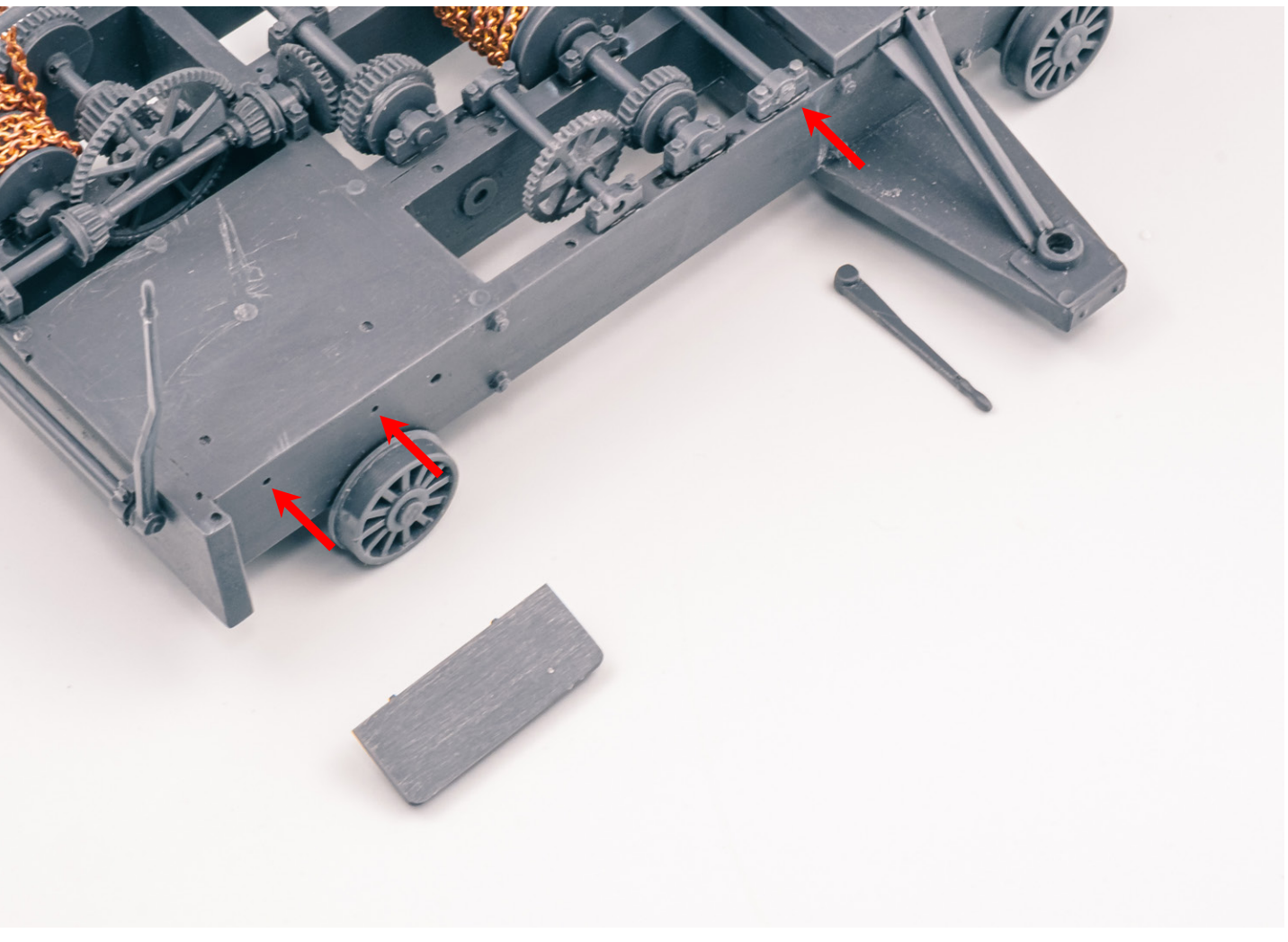

88. Install the remaining platform onto the base frame with the locating pins on the platform brackets lining up with the two smaller divots in the side of the base frame. Install the straight lever onto the end of the operating rod for the ratchet pawl.

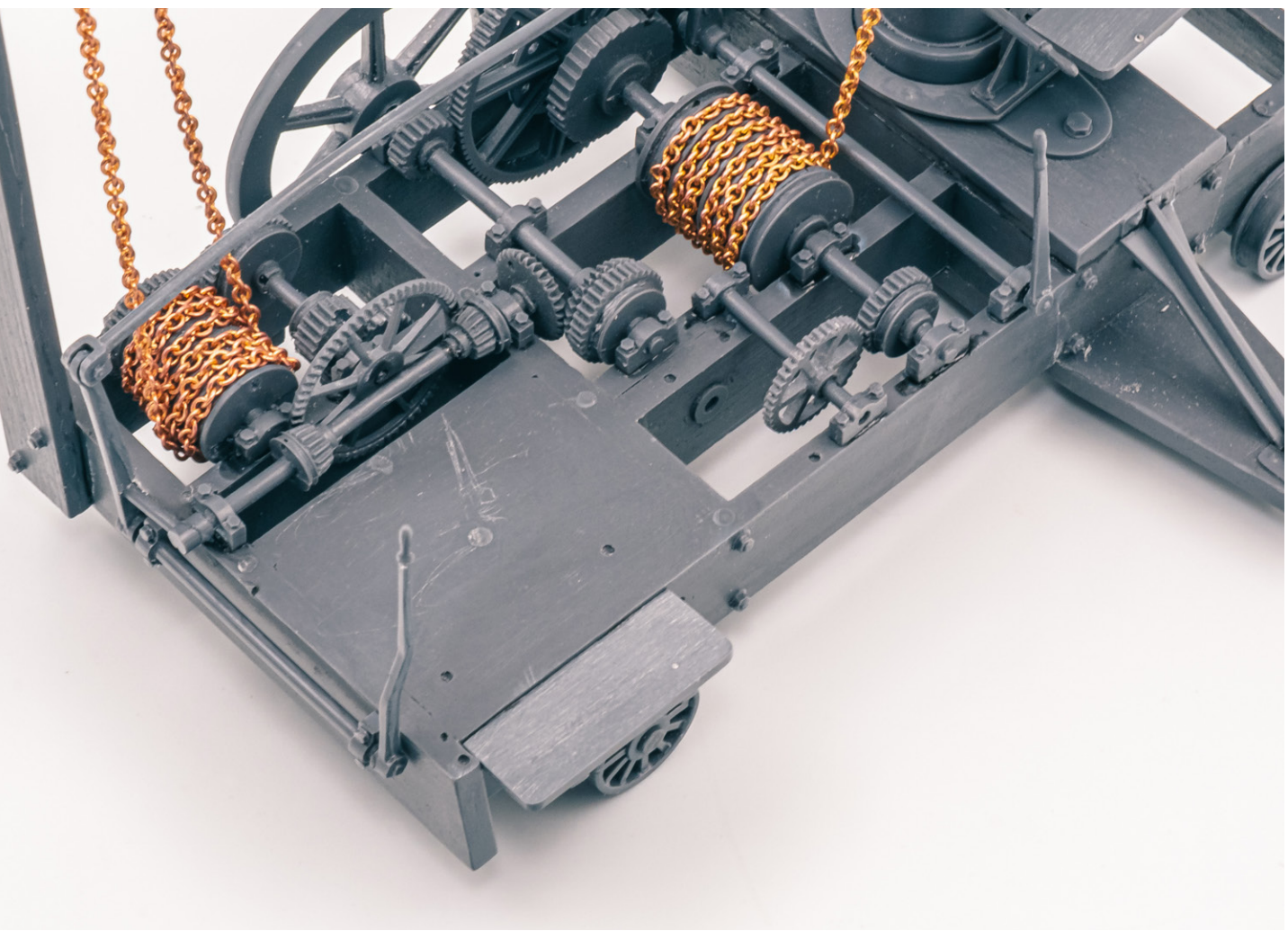

89. The platform and operating rod installed.

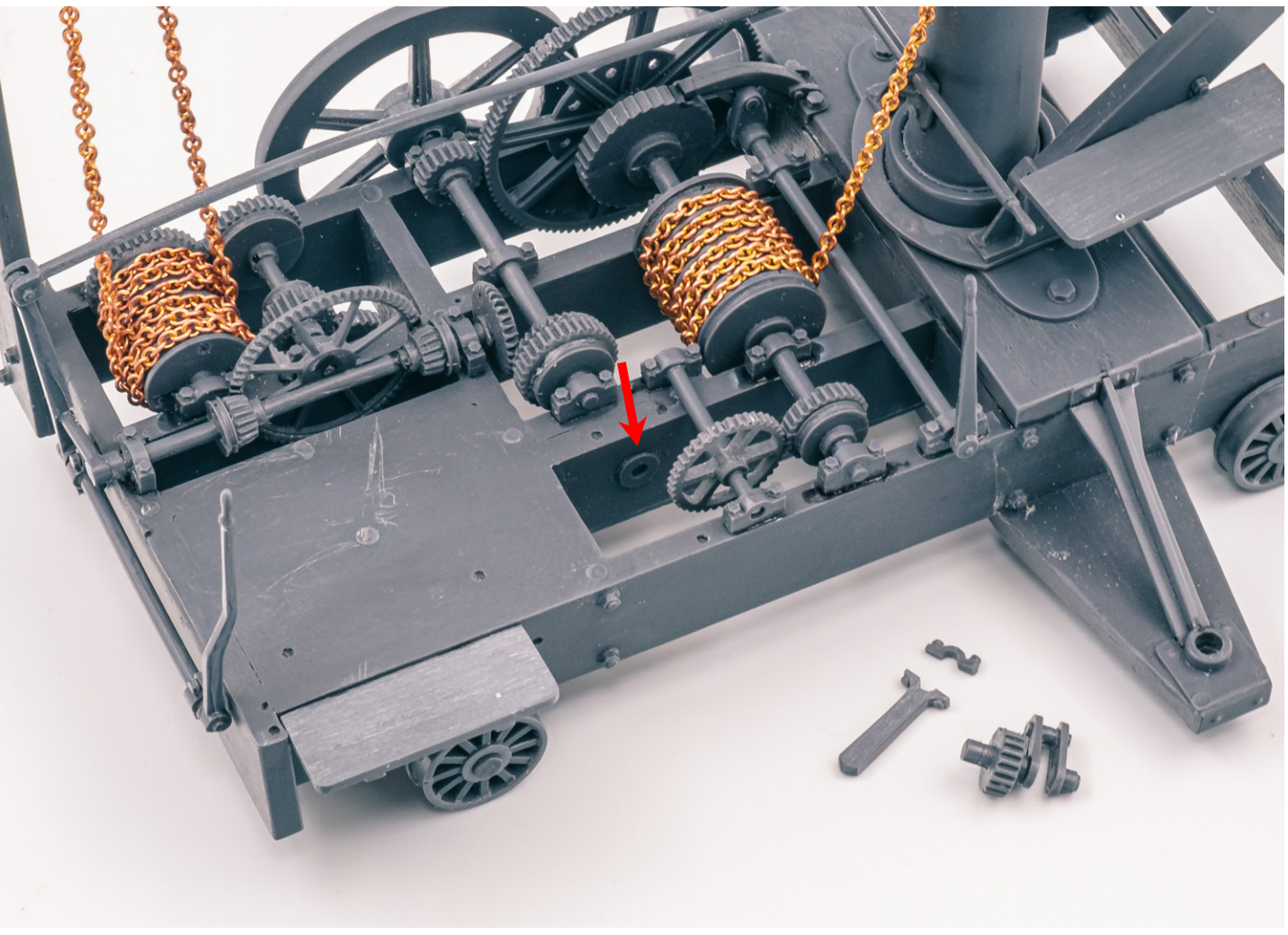

90. Install the steam piston connected gear in the boss in the side of the base frame and mesh it with the drive gear installed in step 82. Place the connecting rod on the crankshaft of this gear. Flip the base over and install the connecting rod onto the crankshaft.

91. The steam piston connected gear and connecting rod installed.

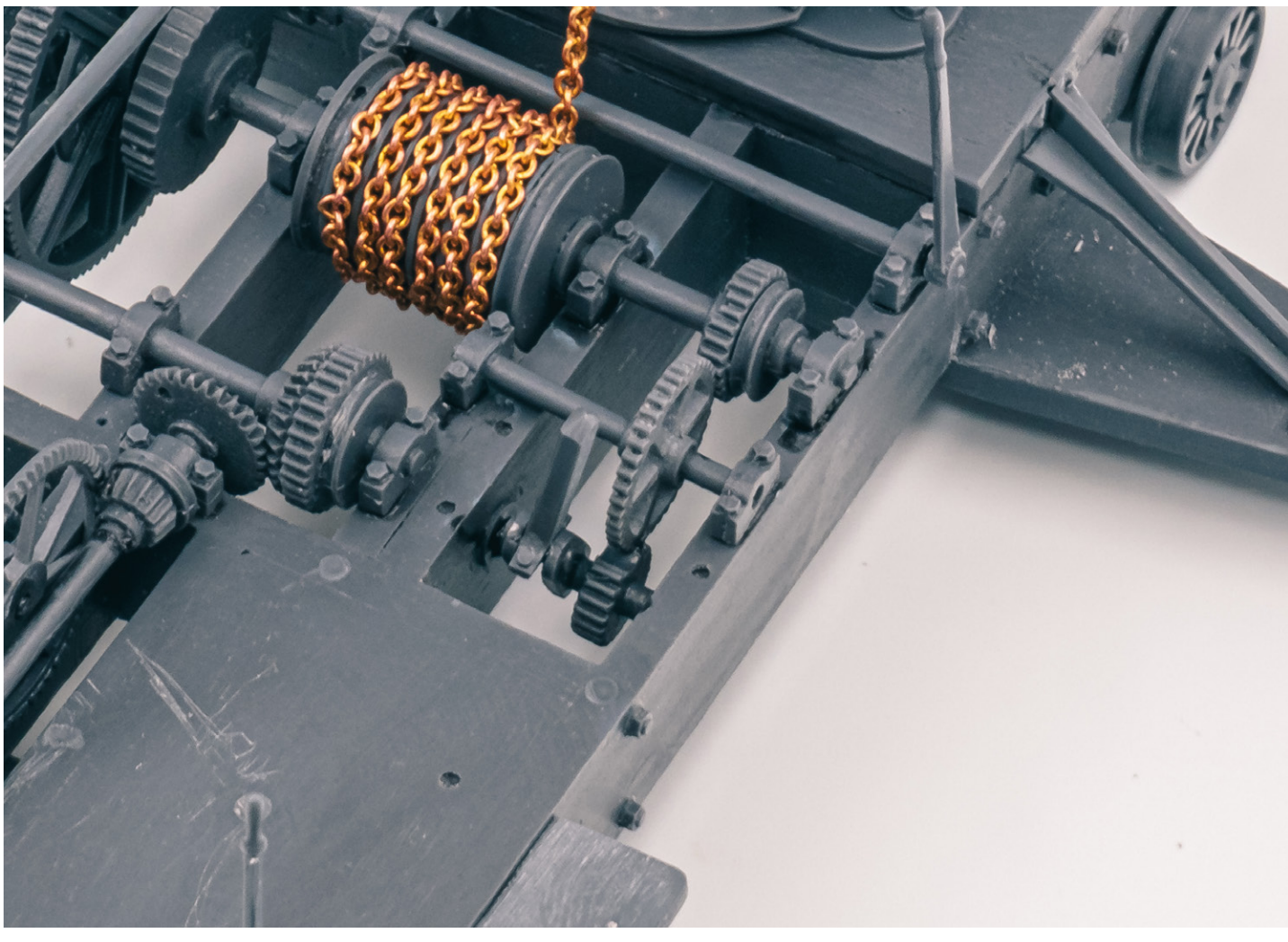

92. While the base frame is flipped over, install the final gear in the underside of the base frame.

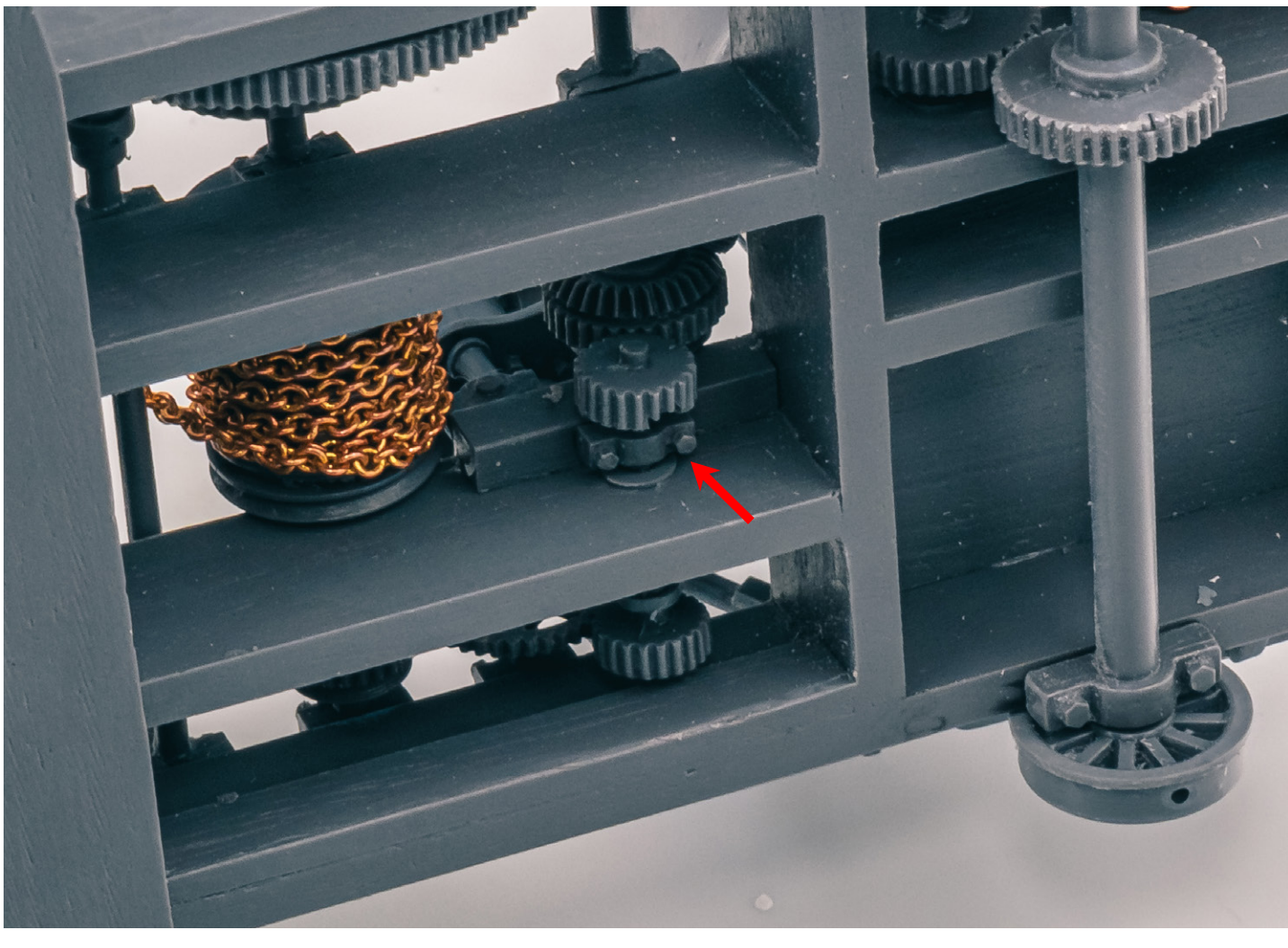

93. Assemble the steam piston. There are two locating pins on the triangular plate with the large nuts that fit into corresponding divots in the lower part of the steam piston cylinder. Place the steam piston cylinder into the larger triangular plate, lining it up with the locating pins on the plate. Place the three thinner rods in the divots on the large triangular plate and then line up the two locating ins on the smaller triangular plate with the divots in the steam piston cylinder, sandwiching the thinner rods between the two plates. There are also locating divots on the smaller triangular plate for the thinner rods. It should be noted that the notch in the larger plate is intentional, the reason why it will become apparent in step 99.

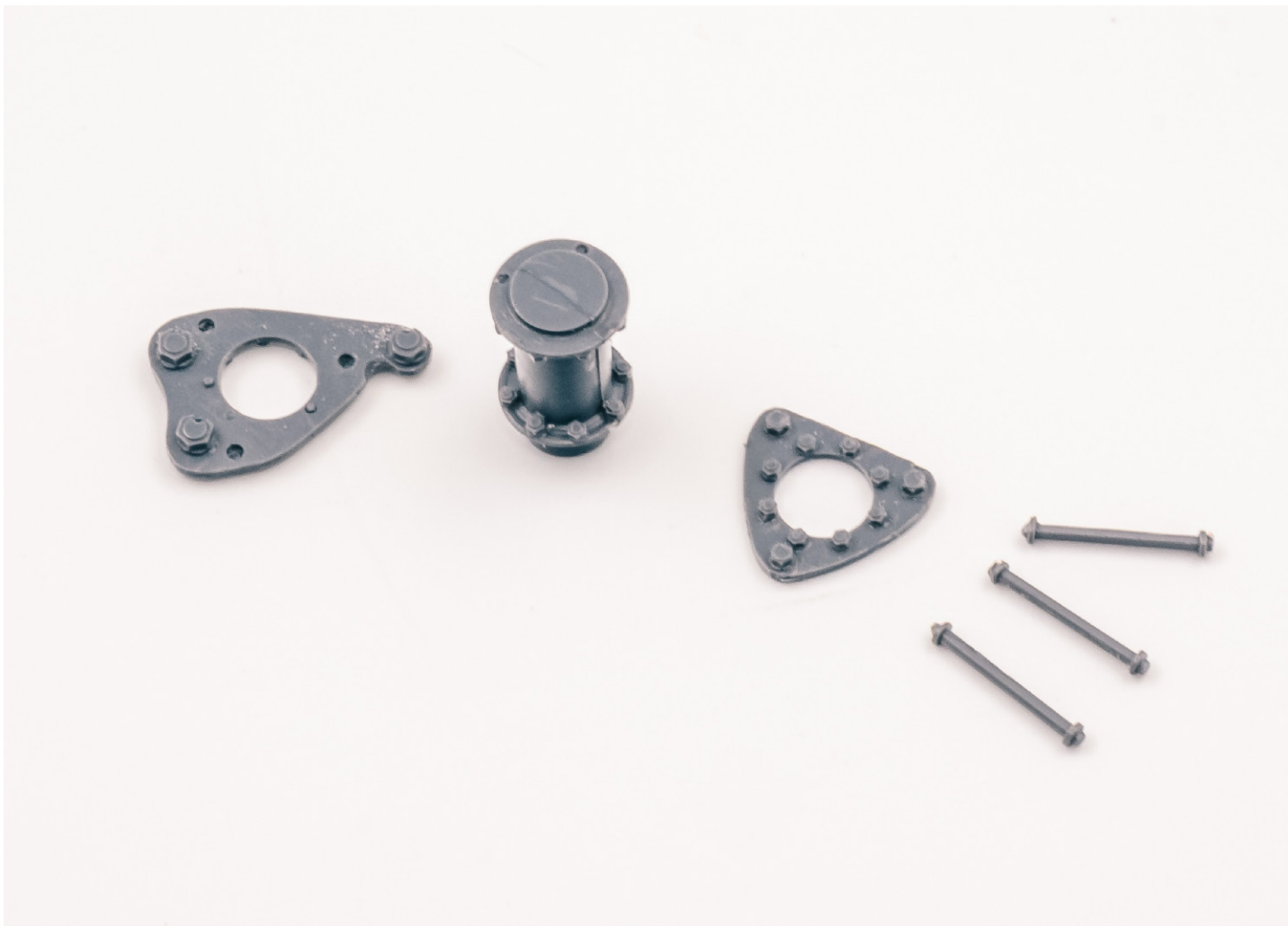

94. Then, place the larger rods into their corresponding divots on the bottom of the larger triangular plate and install the steam piston assembly onto the frame, lining up the three larger rods with the corresponding three divots in the base frame.

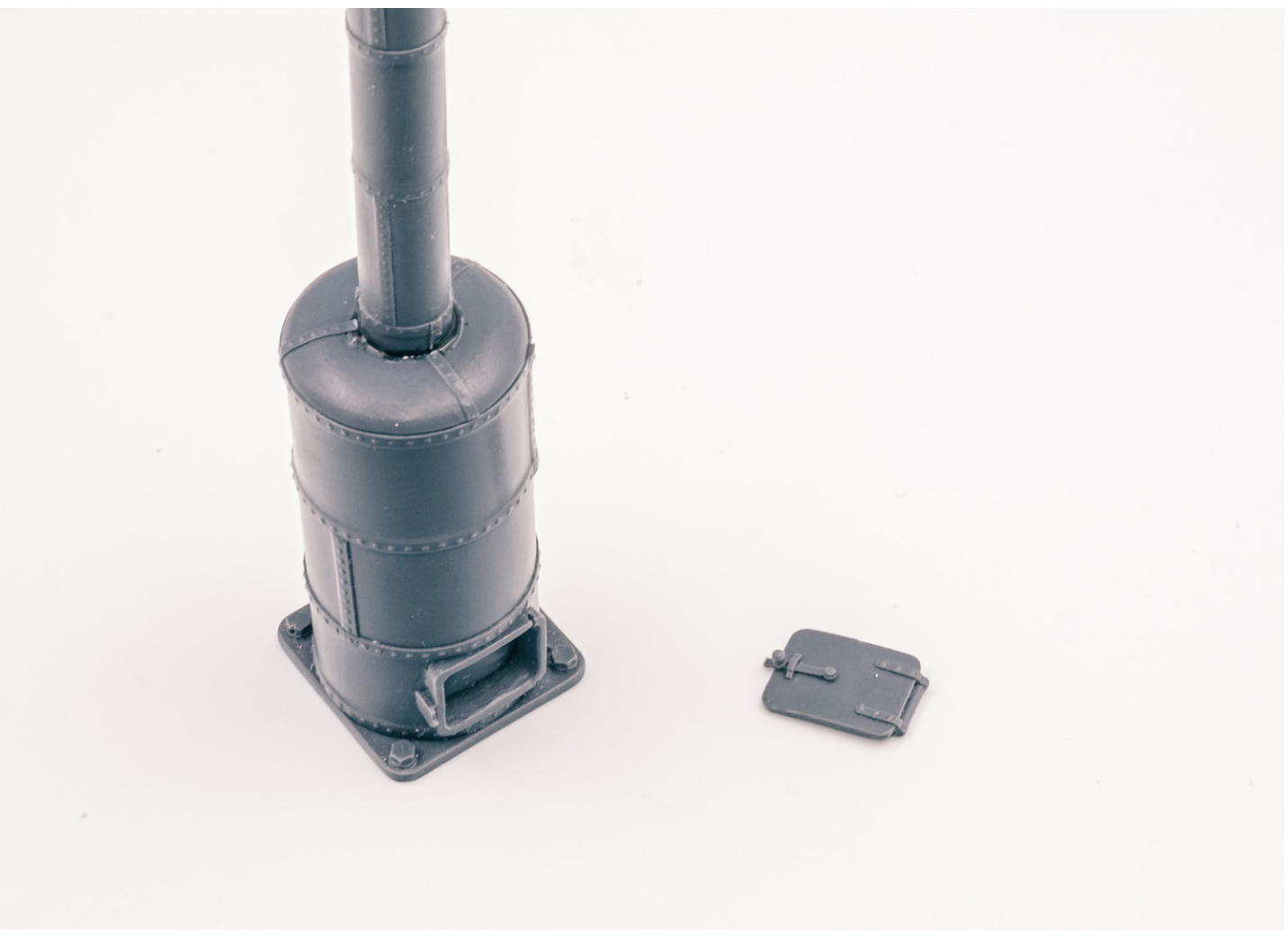

95. Install the chimney and door on the boiler.

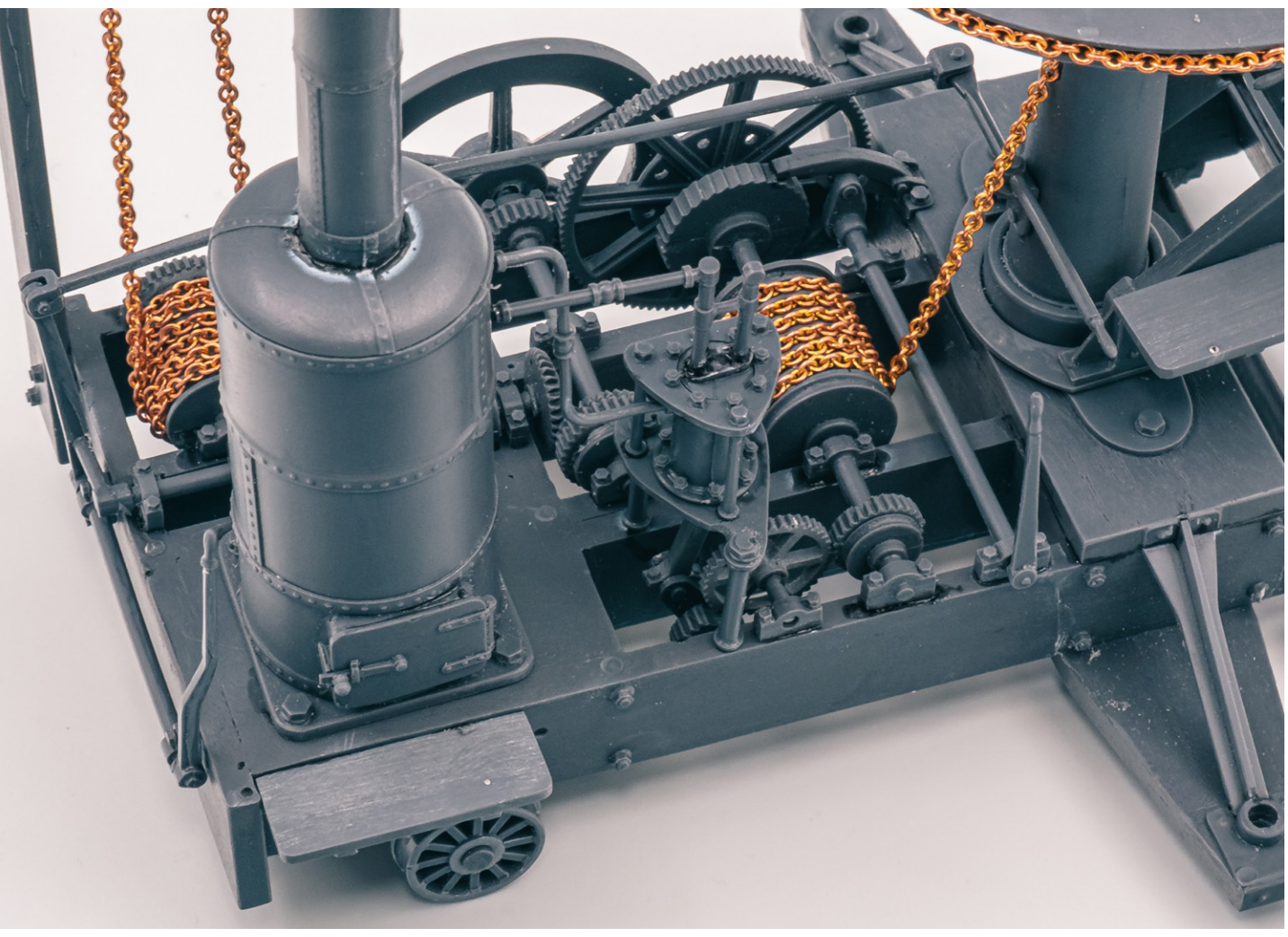

96. Place the boiler onto the base frame and then install the steam piping in place between the steam piston and the boiler. Don't glue the boiler in place until the steam piping has been installed so you don't accidentally install the boiler too far. There are small recesses in the side of the boiler where the steam piping lines up.

97. Another angle of the steam piping from the boiler to the steam piston.

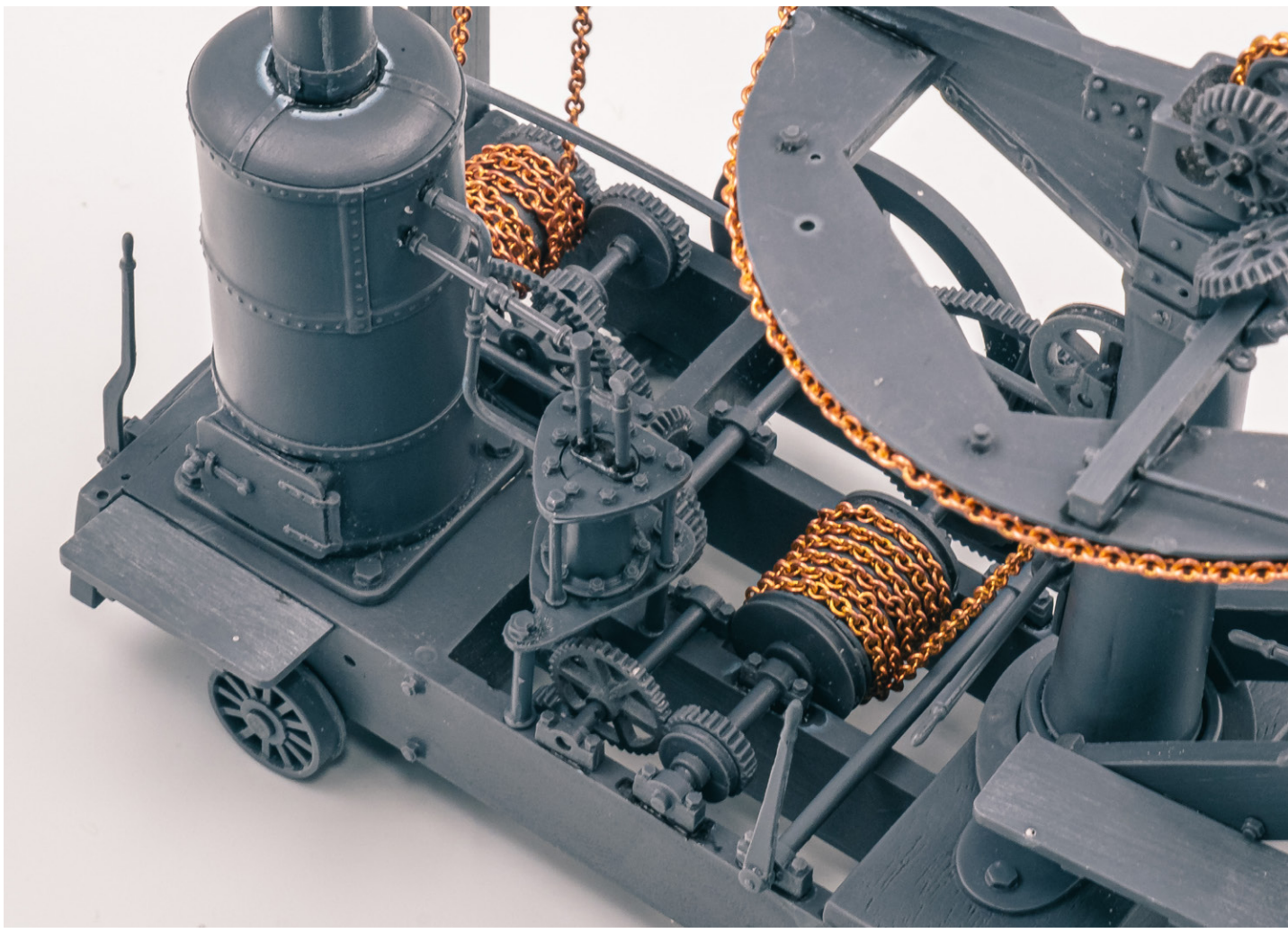

98. With the assembly of the base frame complete, the supporting rods for the main mast can be installed. The flat section with the locating pin corresponds to two divots on the side of the base plate, one pointed out here, the other on the other side, behind the flywheel. The flat of the supporting rods that has the divots line up with the further bump on the ears of the chain guide support plate.

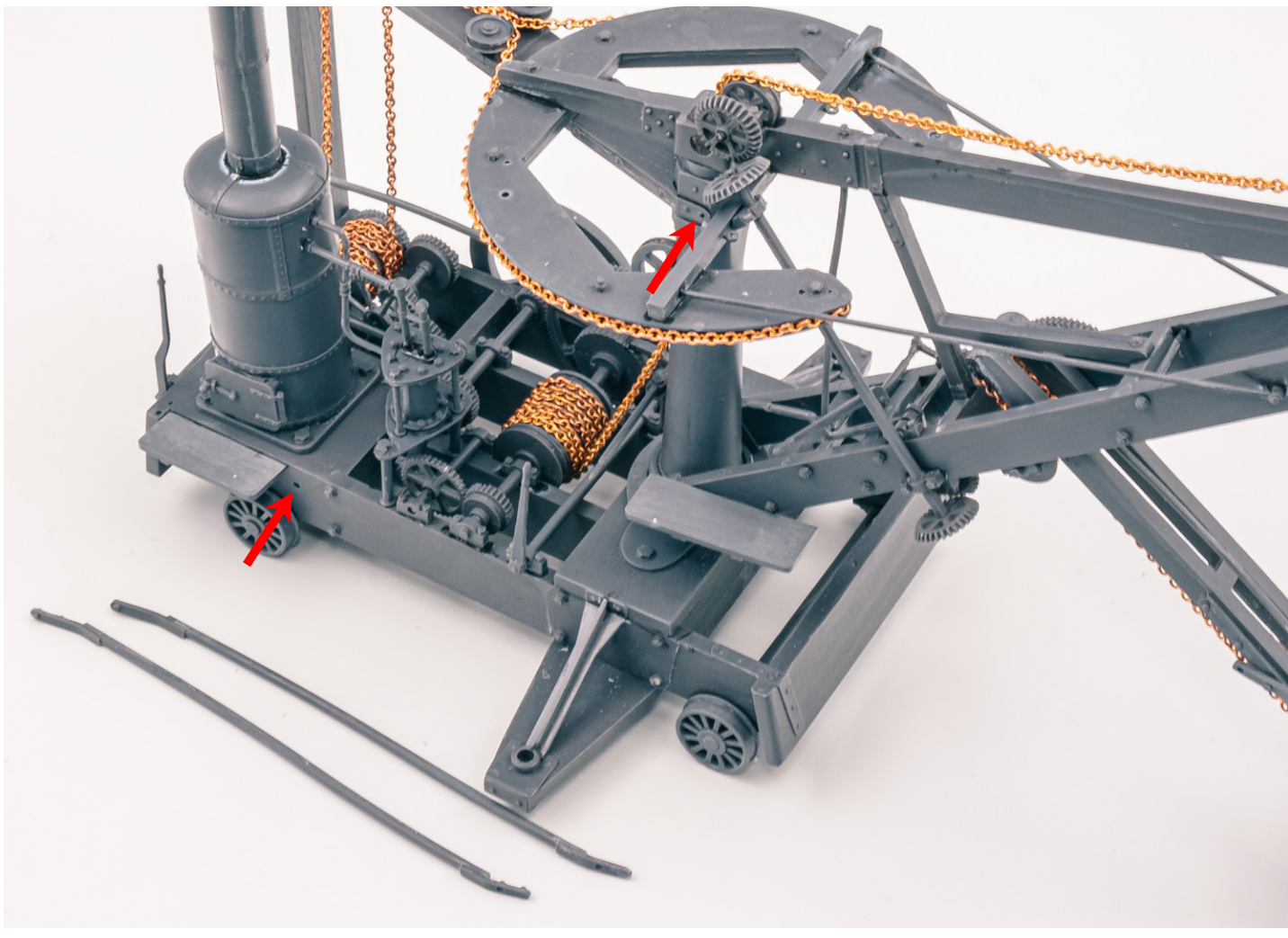

99. The main mast supporting rods installed. If you've left the flywheel off up until this step, now is a good time to install it.

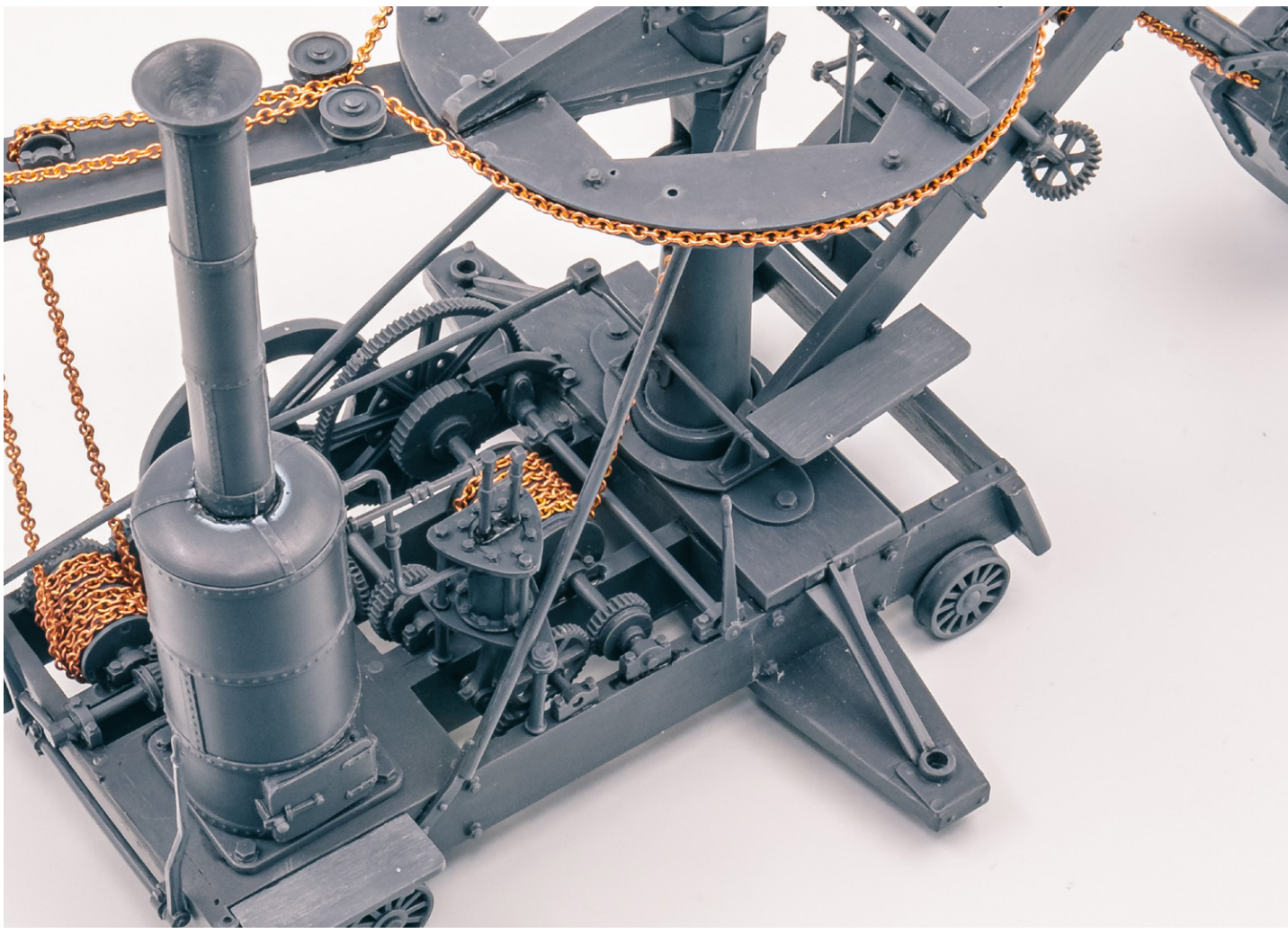

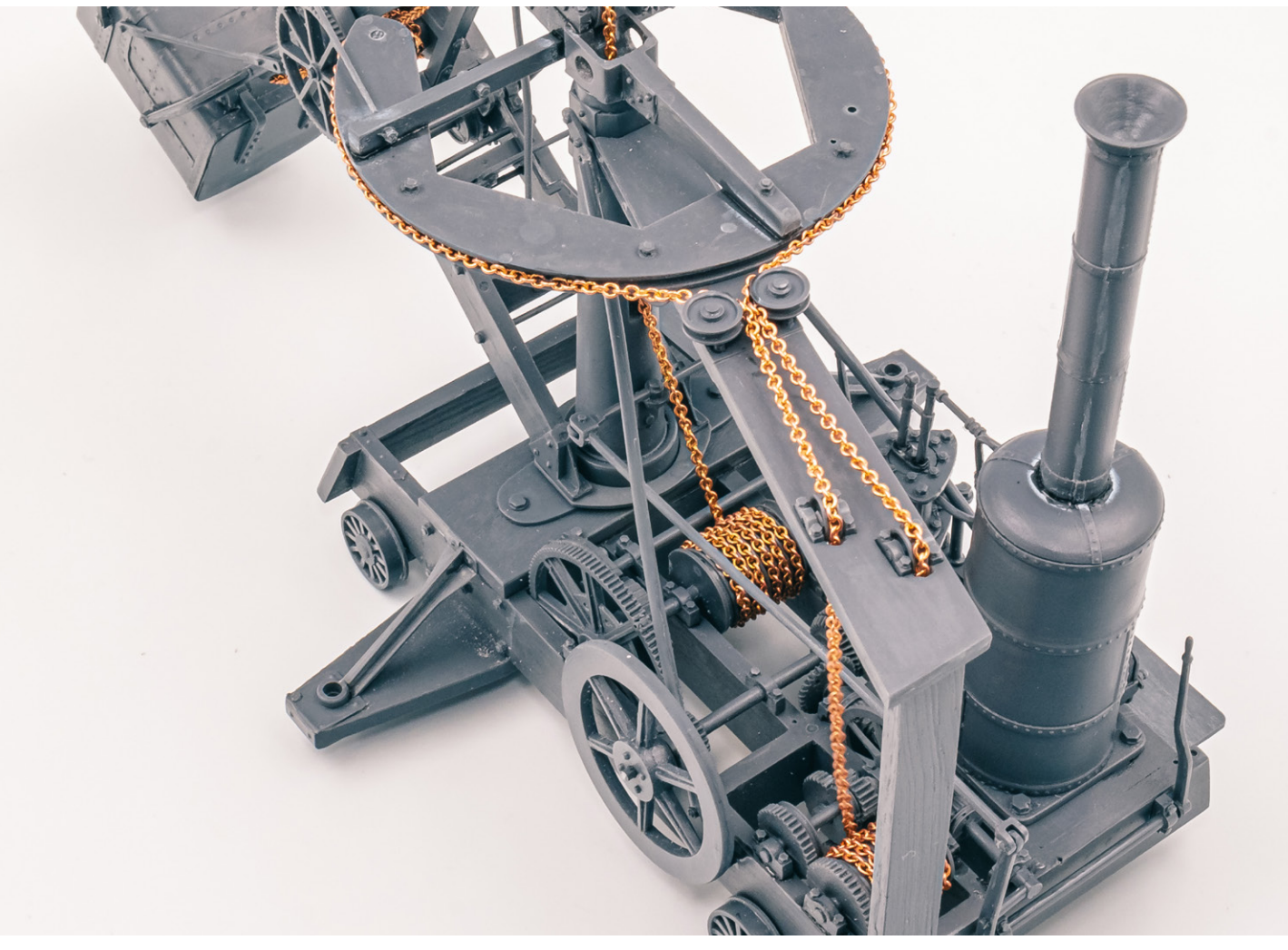

100. The other side's main mast supporting rod.

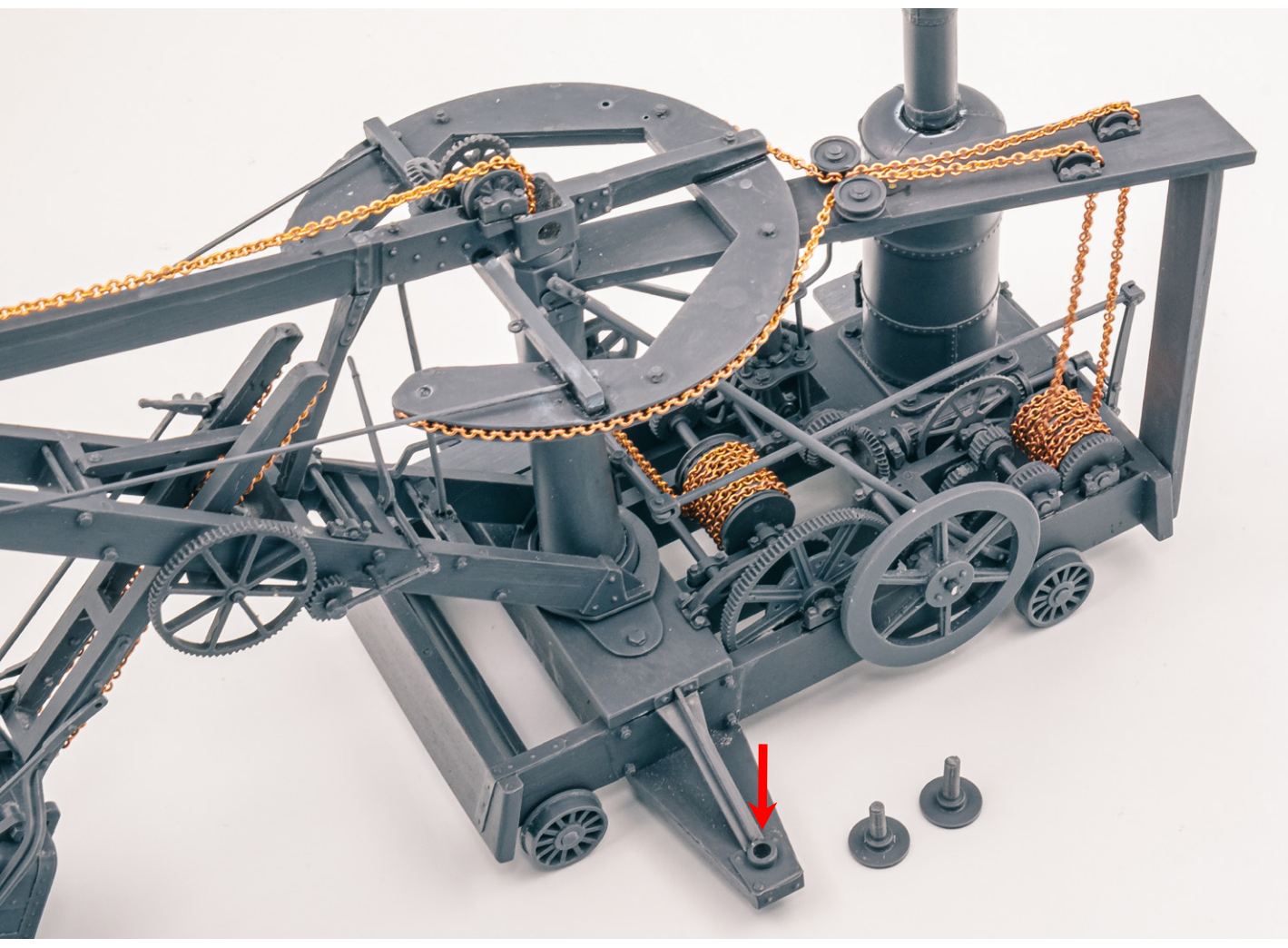

101. Install the jack feet into the bosses in the "ears" of the base frame.

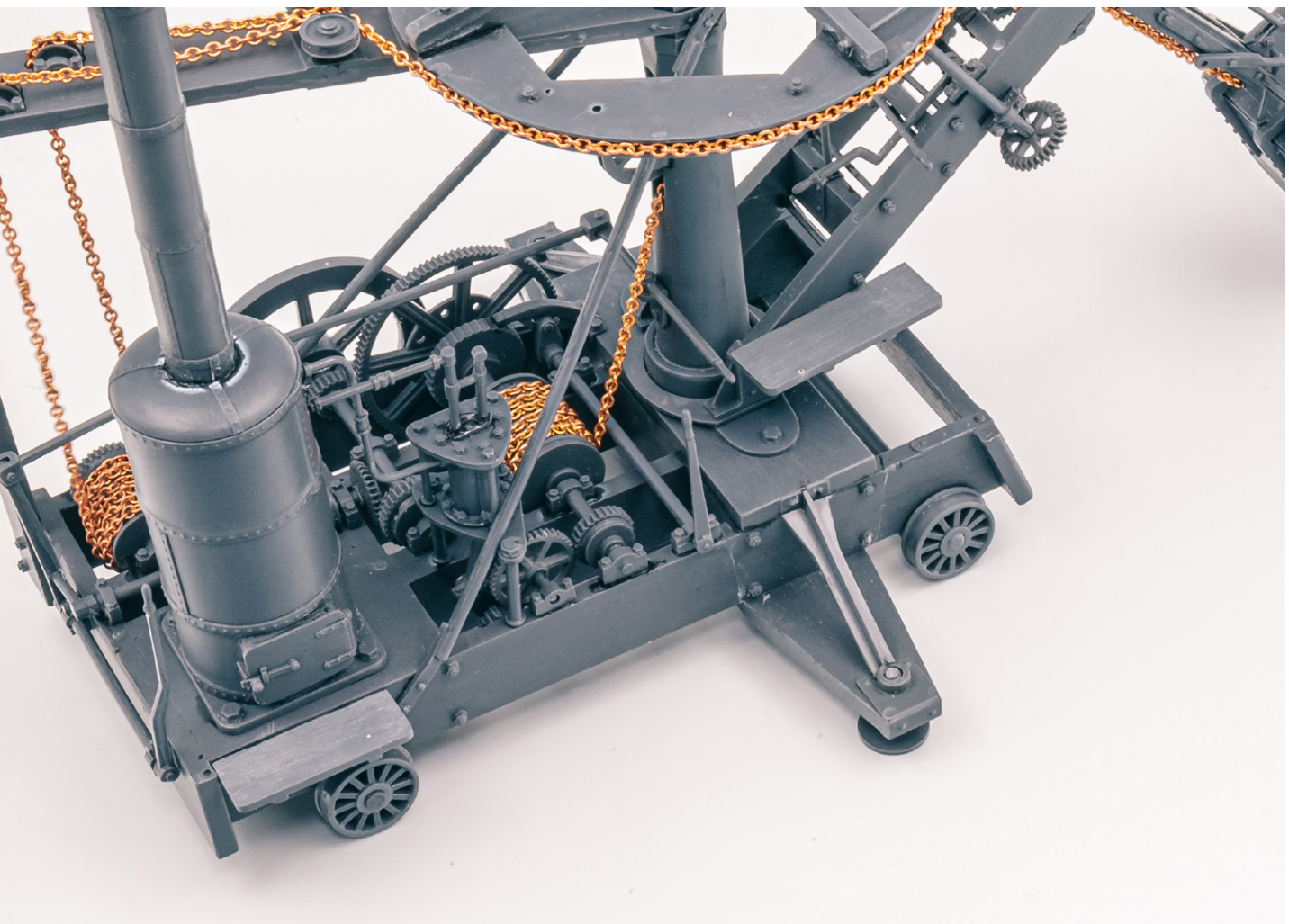

102. The jack feet installed.

103. Install the jack feet handles on top of the jack feet. You may find that cutting a small groove in the top of the threaded section of the jack feet helps keep the handles in place.

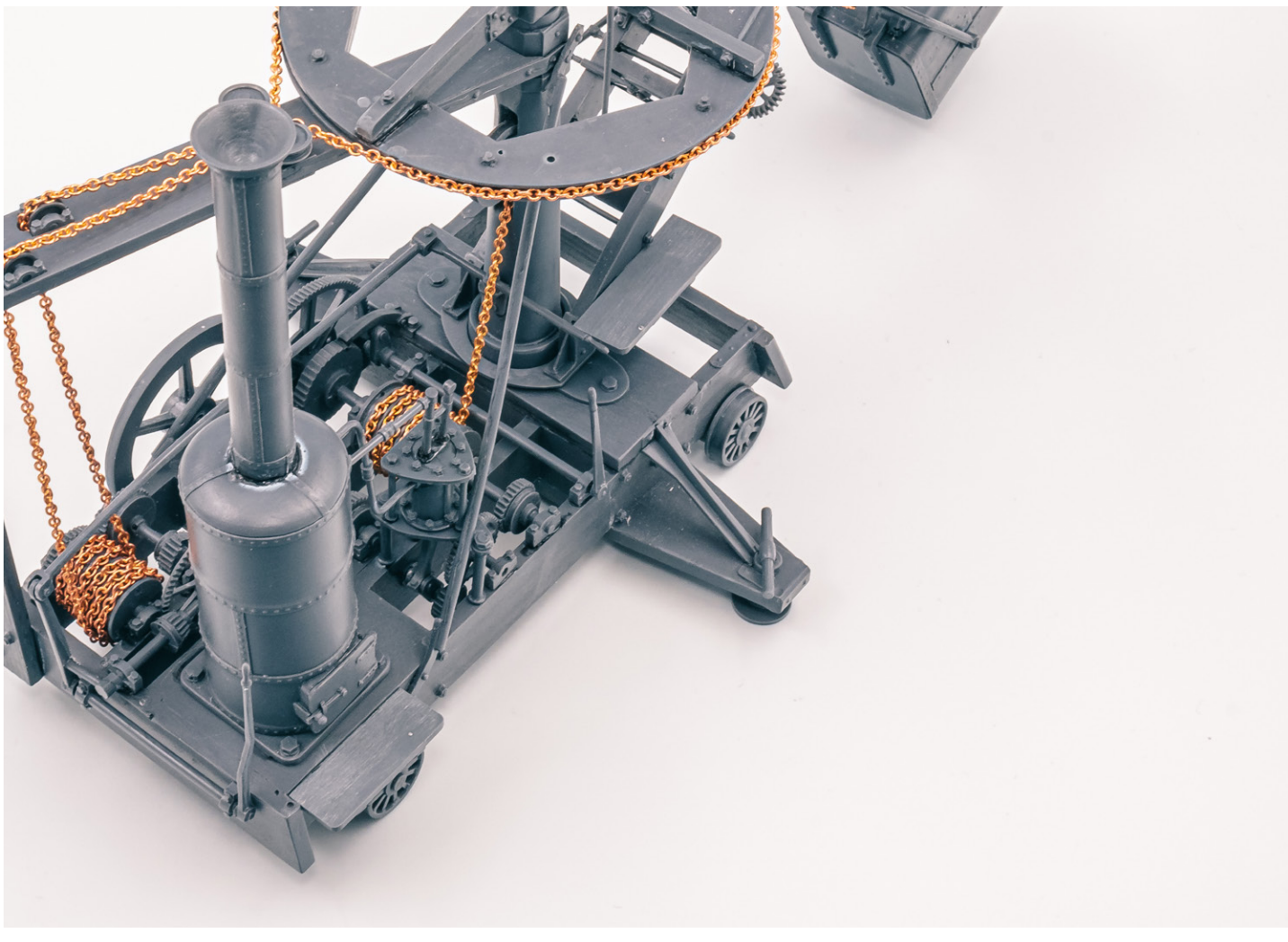

104. Lastly, install the final operating handle on a wooden post next to the lever installed in step 84. Congratulations! Your 1/35th scale Otis Steam Excavator is complete!